**Penner Architectural Millwork, LLC**

**26260 Hwy 32 Lebanon, MO 65536**

**www.pennerarchitectural.com**


# Product Details
# Drawings Submittals

# JOB NOTES

## Panel Sizes and Quantities:

**PRODUCT :** MACH 3 - WOOD GRILLE CEILING SYSTEM
**SOLID WOOD:** SOLID POPLAR, WHITE OAK, MAPLE, BIRCH, CHERRY, ETC
**SUBSTRATE:** CLASS "A" FIRE RATED PARTICLE BOARD (NAUF OR ULEF)
**FSC CERIFICATION:** NONE
**PANEL DESCRIPTION:** 12-1/4" WIDE X UP TO 7'-11" LONG
**BLADE DETAILS:** 5 BLADES PER FOOT, 1/2" THICK x 3" DEEP
**FINISH:** CLEAR/CUSTOM, SATIN SHEEN
**PERIMETER:** PERIMETER PANELS WILL BE FIELD CUT (IF REQUIRED) BY INSTALLER
EXTRA BACKERS TO BE FIELD INSTALLED (IF REQUIRED) BY OTHERS
**CUTOUTS:** ALL FIXTURE AND DEVICE OPENINGS TO BE FIELD CUT BY INSTALLER
**SUSPENSION:** ALL PANELS WILL BE ATTACHED WITH FASTENERS, BY INSTALLER, AT 24" O.C. MAX

**TOTAL PANELS**: APPROX ### TOTAL SQ FT (WASTE / ATTIC STOCK NOT INCLUDED)
1## P01 12-1/4" WIDE X UP TO 7-11" LONG

OVERAGE IS NOT INCLUDED. CUSTOMER SHOULD CONSIDER ORDERING EXTRA MATERIAL
FOR WASTE AND/OR ATTIC STOCK.

PENNER ARCHITECTURAL MILLWORK LLC
26260 Hwy 32 Lebanon, MO 65536
Office: (417) 718-2400
Website: www.pennerarchitectural.com

| PRODUCT DETAILS | | |
|---|---|---|
| Mach 1-SW-.50 5-3.00 | | PAGE P1 |
| DATE: 08-10-26 | SCALE: AS NOTED | SDR |
| REV: | DATE: | |

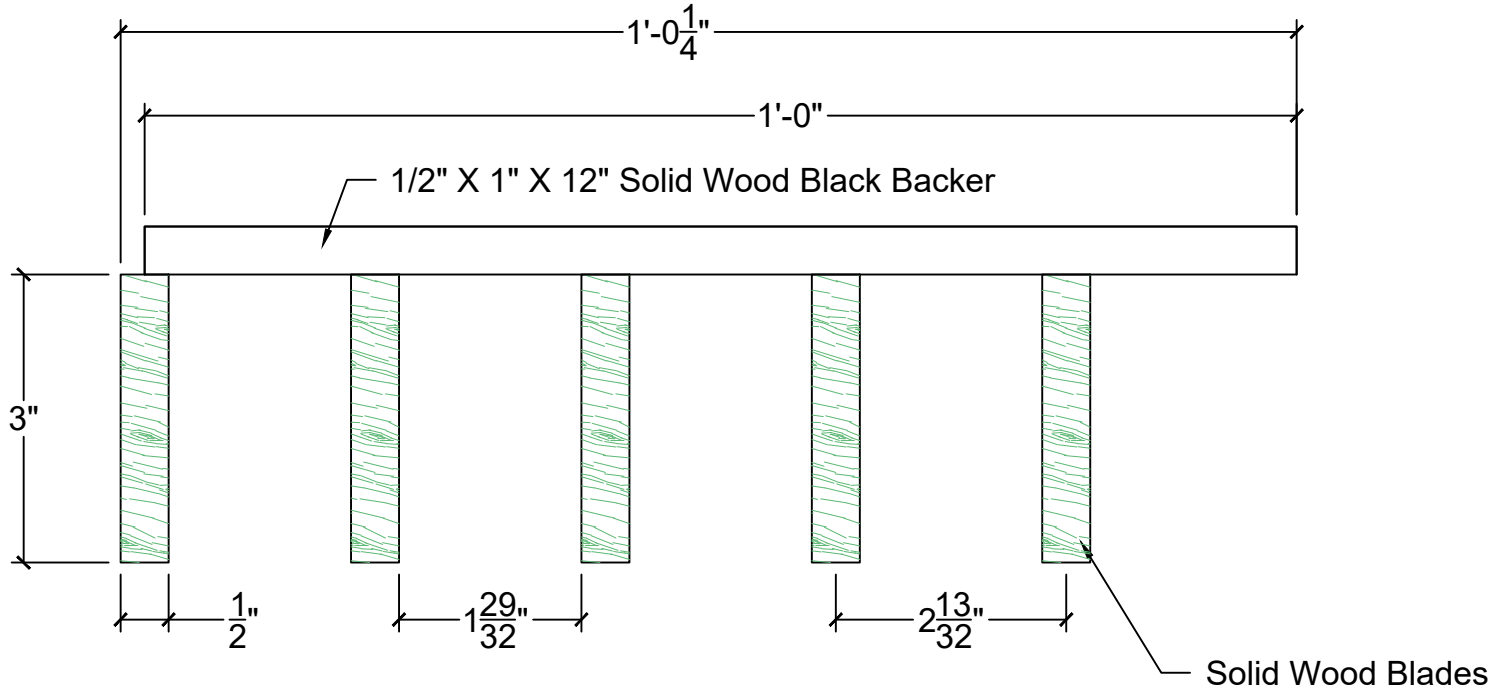


A
P2

Typical Panel Section View

Scale: 6" = 1'

PENNER ARCHITECTURAL MILLWORK LLC

26260 Hwy 32 Lebanon, MO 65536

Office: (417) 718-2400

Website: www.pennerarchitectural.com

| PRODUCT DETAILS | | |
|---|---|---|
| Mach 1-SW-.50<br>5-3.00 | | PAGE<br>P2 |
| DATE: 08-10-26 | SCALE: AS NOTED | SDR |
| REV: | DATE: | |

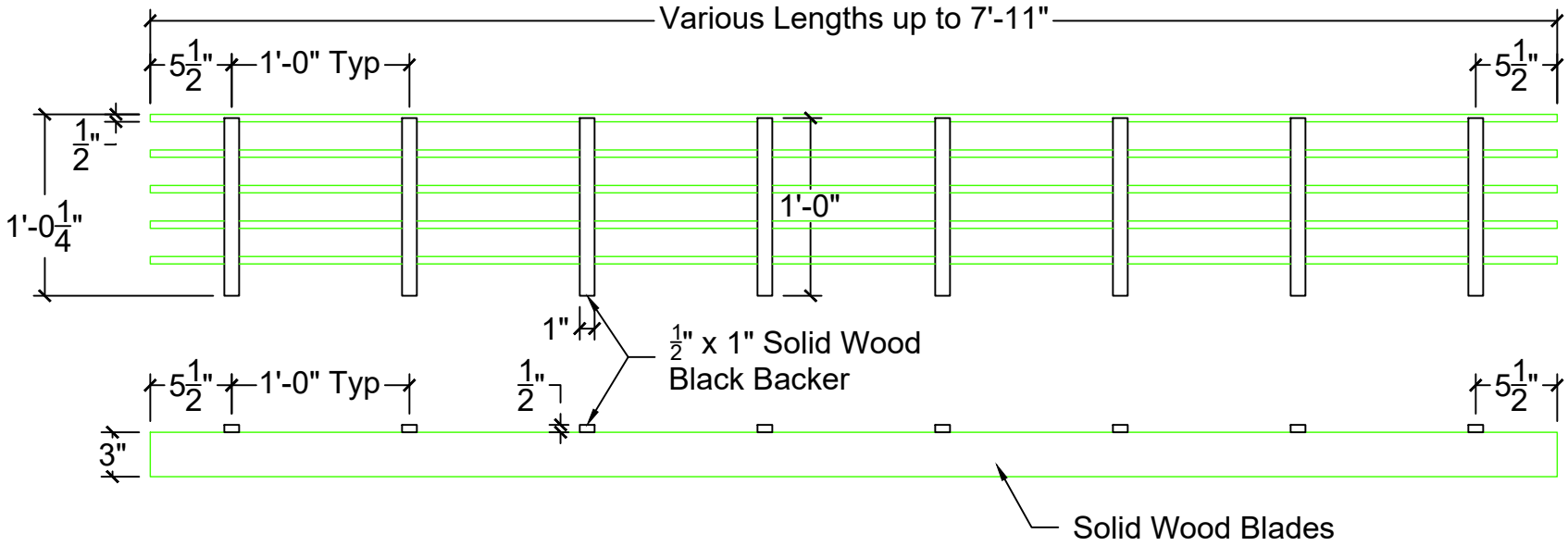


A
P3

## Panel Details - Back and Side Views

Scale: 1" = 1'

PENNER ARCHITECTURAL MILLWORK LLC
26260 Hwy 32 Lebanon, MO 65536
Office: (417) 718-2400
Website: www.pennerarchitectural.com

| PRODUCT DETAILS | | |
|---|---|---|
| Mach 1-SW-.50<br>5-3.00 | | PAGE<br>P3 |
| DATE: 08-10-26 | SCALE: AS NOTED | SDR |
| REV: | DATE: | |

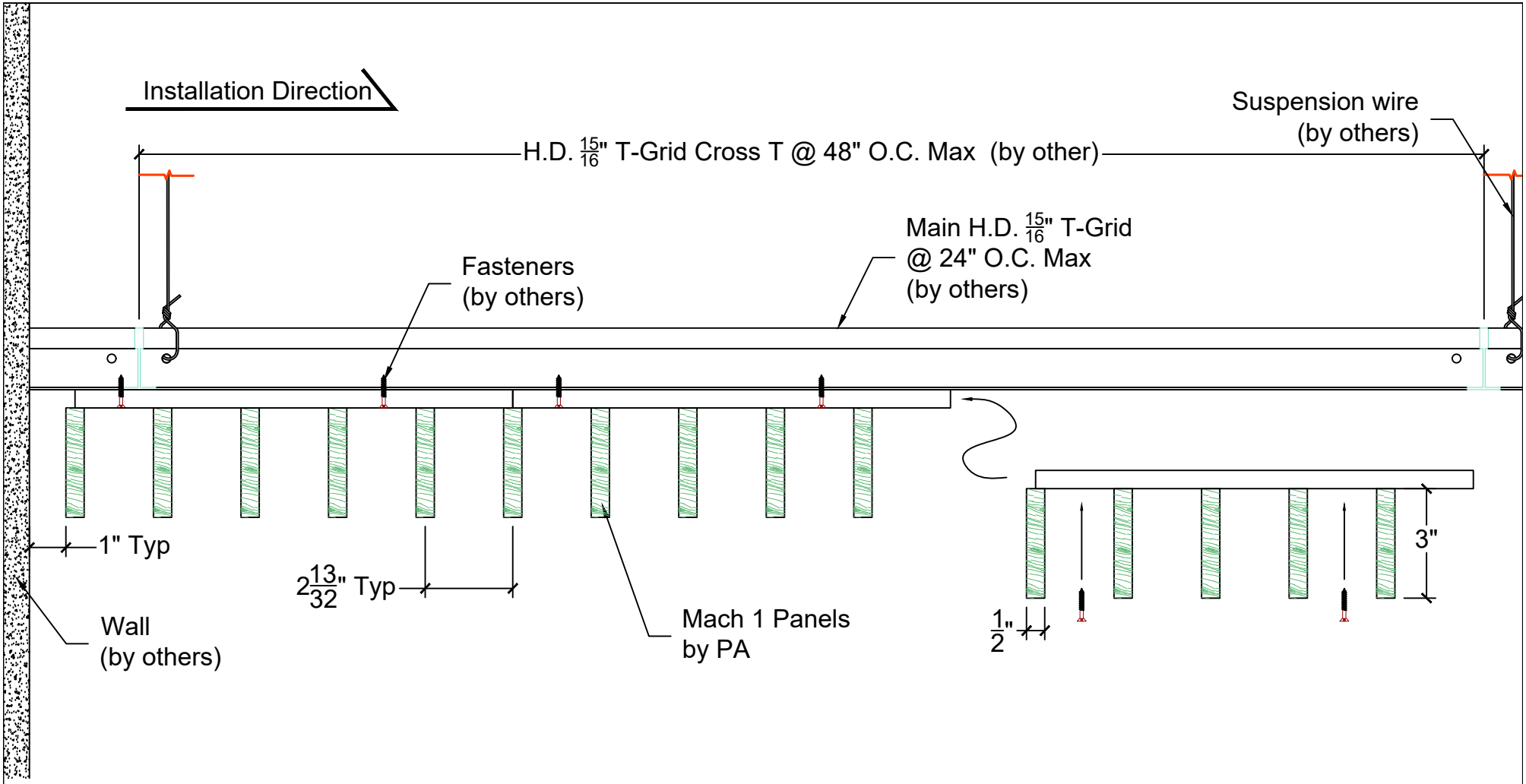


A
P4

## Panel Installation - Beginning Ceiling Installation

Scale: 3" = 1'


PENNER ARCHITECTURAL MILLWORK LLC

26260 Hwy 32 Lebanon, MO 65536

Office: (417) 718-2400

Website: www.pennerarchitectural.com


| PRODUCT DETAILS | | |
|---|---|---|
| Mach 1-SW-.50<br>5-3.00 | | PAGE<br>P4 |
| DATE: 08-10-26 | SCALE: AS NOTED | SDR |
| REV: | DATE: | |

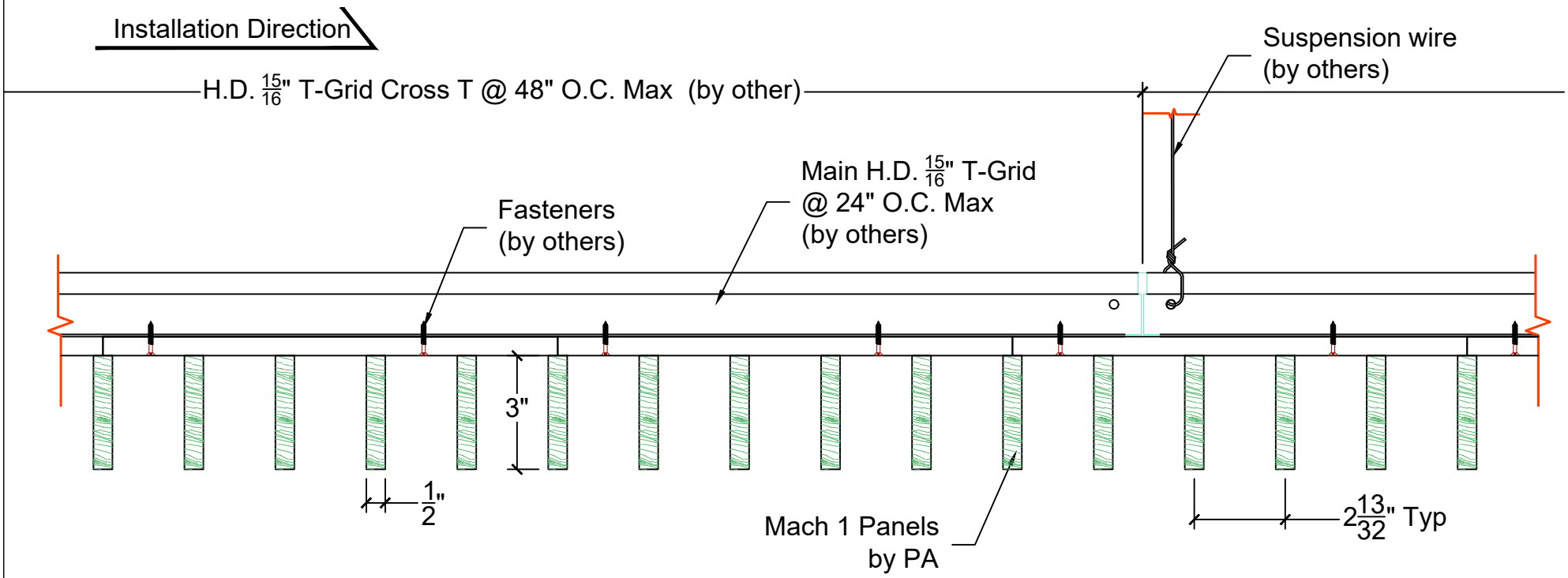


A
P5

## Panel Installation Details

Scale: 3" = 1'


PENNER ARCHITECTURAL MILLWORK LLC

26260 Hwy 32 Lebanon, MO 65536

Office: (417) 718-2400

Website: www.pennerarchitectural.com


| PRODUCT DETAILS | | |
|---|---|---|
| Mach 1-SW-.50 5-3.00 | | PAGE P5 |
| DATE: 08-10-26 | SCALE: AS NOTED | SDR |
| REV: | DATE: | |

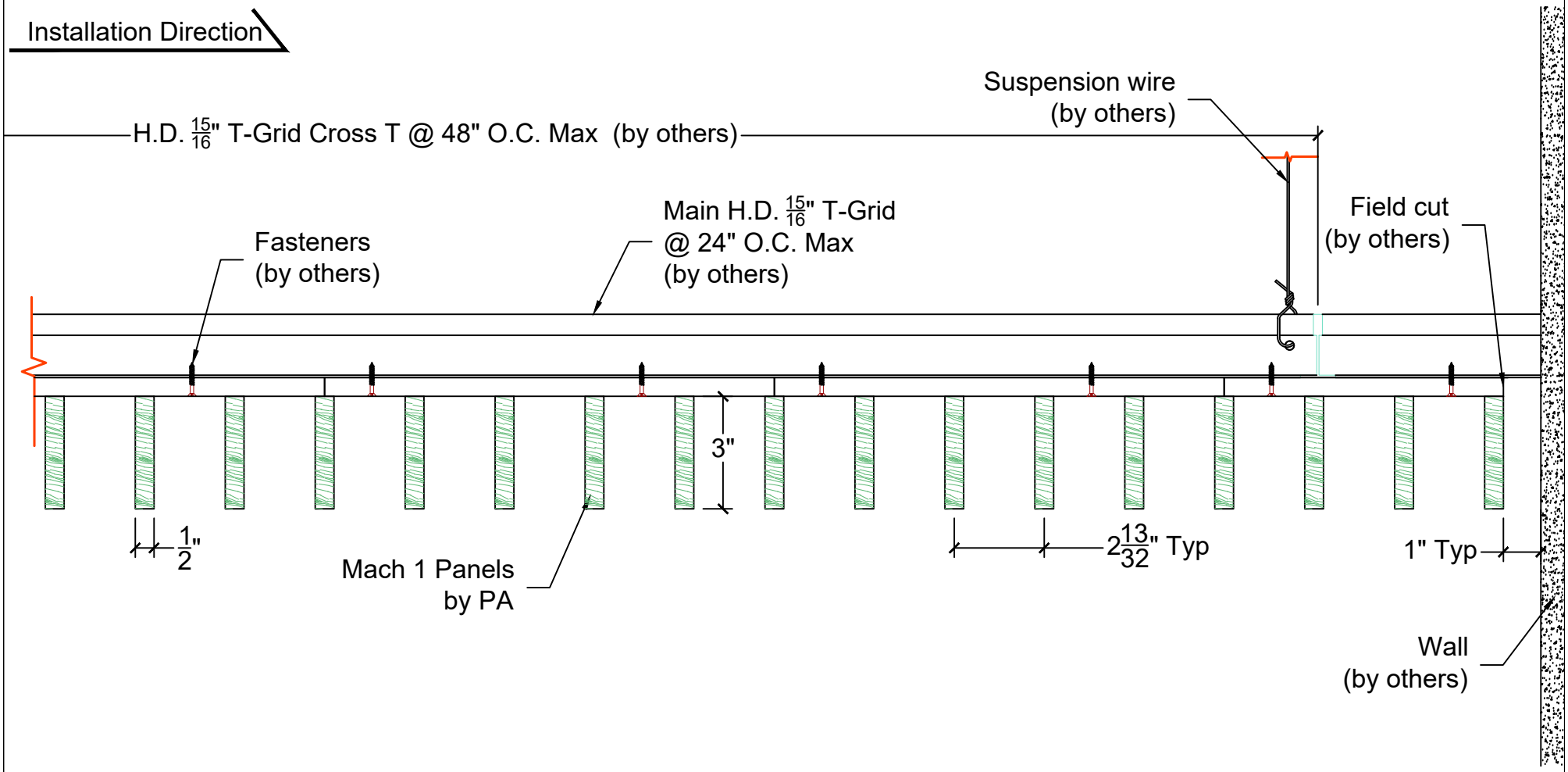


A
P6

Panel Installation - Ending Ceiling Installation

Scale: 3" = 1'

PENNER ARCHITECTURAL MILLWORK LLC

26260 Hwy 32 Lebanon, MO 65536

Office: (417) 718-2400

Website: www.pennerarchitectural.com

| PRODUCT DETAILS | | |
|---|---|---|
| Mach 1-SW-.50 5-3.00 | | PAGE P6 |
| DATE: 08-10-26 | SCALE: AS NOTED | SDR |
| REV: | DATE: | |

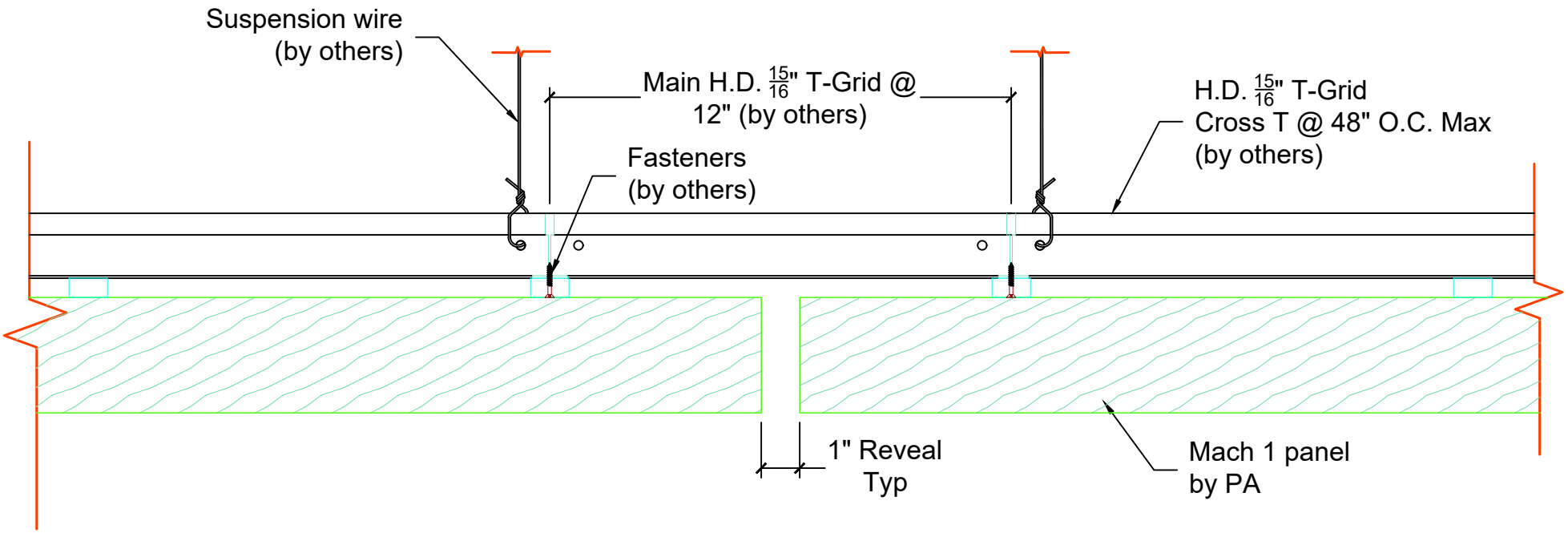


A
P7

## Panel Installation @ Reveal Between Panels

Scale: 3" = 1'

PENNER ARCHITECTURAL MILLWORK LLC
26260 Hwy 32 Lebanon, MO 65536
Office: (417) 718-2400
Website: www.pennerarchitectural.com

| PRODUCT DETAILS | | |
|---|---|---|
| Mach 1-SW-.50 5-3.00 | | PAGE P7 |
| DATE: 08-10-26 | SCALE: AS NOTED | SDR |
| REV: | DATE: | |

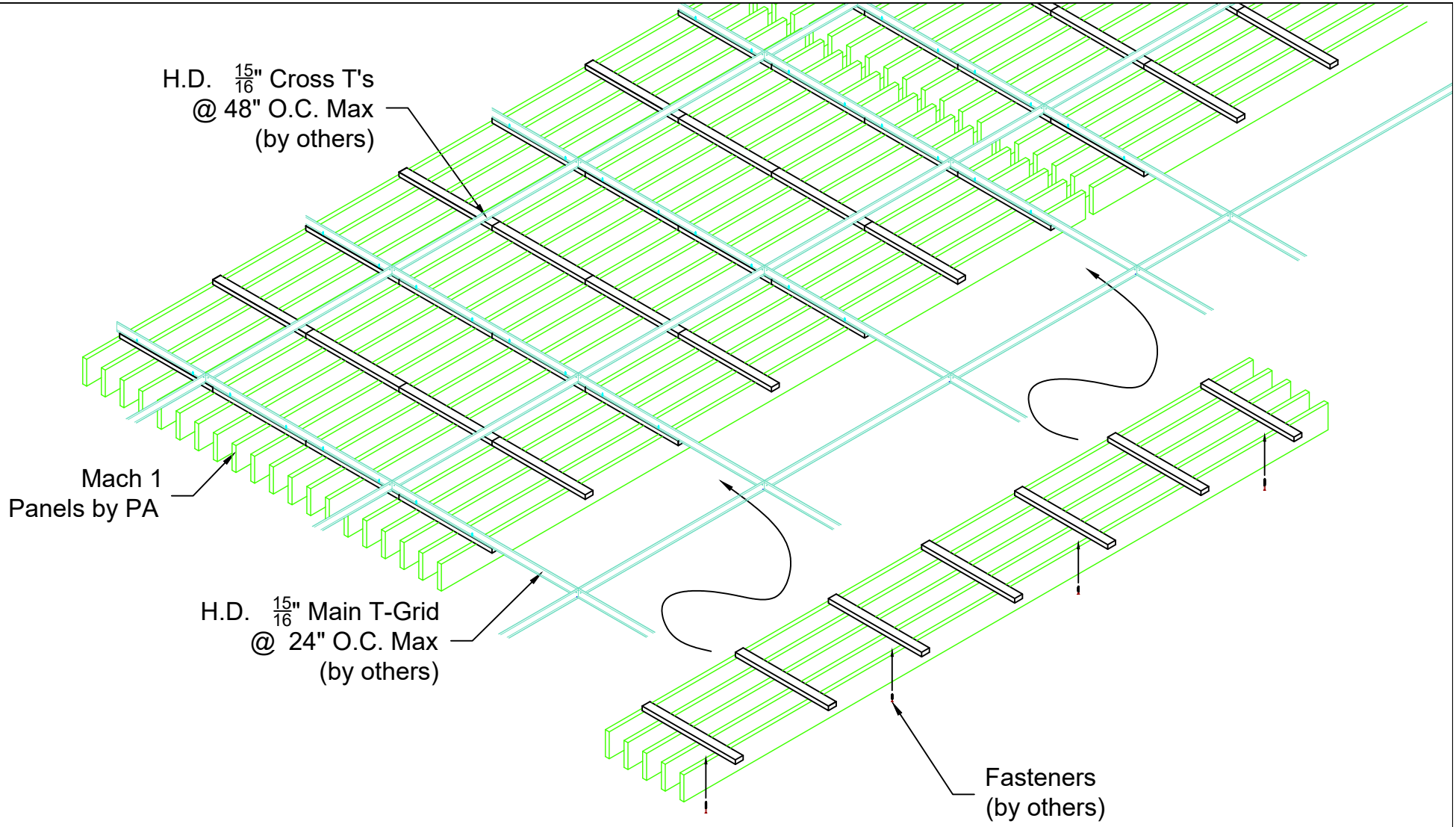


A
P8

## Isometric Panel Installation

Scale: 3/4" = 1'

PENNER ARCHITECTURAL MILLWORK LLC
26260 Hwy 32 Lebanon, MO 65536
Office: (417) 718-2400
Website: www.pennerarchitectural.com

| PRODUCT DETAILS | | |
|---|---|---|
| Mach 1-SW-.50 5-3.00 | | PAGE P8 |
| DATE: 08-10-26 | SCALE: AS NOTED | SDR |
| REV: | DATE: | |