Penner Architectural Millwork, LLC

26260 Hwy 32 Lebanon, MO 65536

www.pennerarchitectural.com

Product Details
Drawings Submittals

JOB NOTES

Panel Sizes and Quantities:

PRODUCT : MACH 3 - WOOD GRILLE CEILING SYSTEM
SOLID WOOD: SOLID POPLAR, WHITE OAK, MAPLE, BIRCH, CHERRY, ETC
SUBSTRATE: CLASS "A" FIRE RATED PARTICLE BOARD (NAUF OR ULEF)
FSC CERIFICATION: NONE
PANEL DESCRIPTION: 12-1/4" WIDE X UP TO 7'-11" LONG
BLADE DETAILS: 5 BLADES PER FOOT, 1/2" THICK x 2-1/4" DEEP
FINISH: CLEAR/CUSTOM, SATIN SHEEN
PERIMETER: PERIMETER PANELS WILL BE FIELD CUT (IF REQUIRED) BY INSTALLER
EXTRA BACKERS TO BE FIELD INSTALLED (IF REQUIRED) BY OTHERS
CUTOUTS: ALL FIXTURE AND DEVICE OPENINGS TO BE FIELD CUT BY INSTALLER
SUSPENSION: ALL PANELS WILL BE ATTACHED WITH FASTENERS, BY INSTALLER, AT 24" O.C. MAX

TOTAL PANELS: APPROX ### TOTAL SQ FT (WASTE / ATTIC STOCK NOT INCLUDED)
1## P01 12-1/4" WIDE X UP TO 7-11" LONG

OVERAGE IS NOT INCLUDED. CUSTOMER SHOULD CONSIDER ORDERING EXTRA MATERIAL
FOR WASTE AND/OR ATTIC STOCK.

PENNER ARCHITECTURAL MILLWORK LLC
26260 Hwy 32 Lebanon, MO 65536
Office: (417) 718-2400
Website: www.pennerarchitectural.com

PRODUCT DETAILS		
Mach 1-SW-.50 5-2.25		PAGE P1
DATE: 08-10-26	SCALE: AS NOTED	SDR
REV:	DATE:	

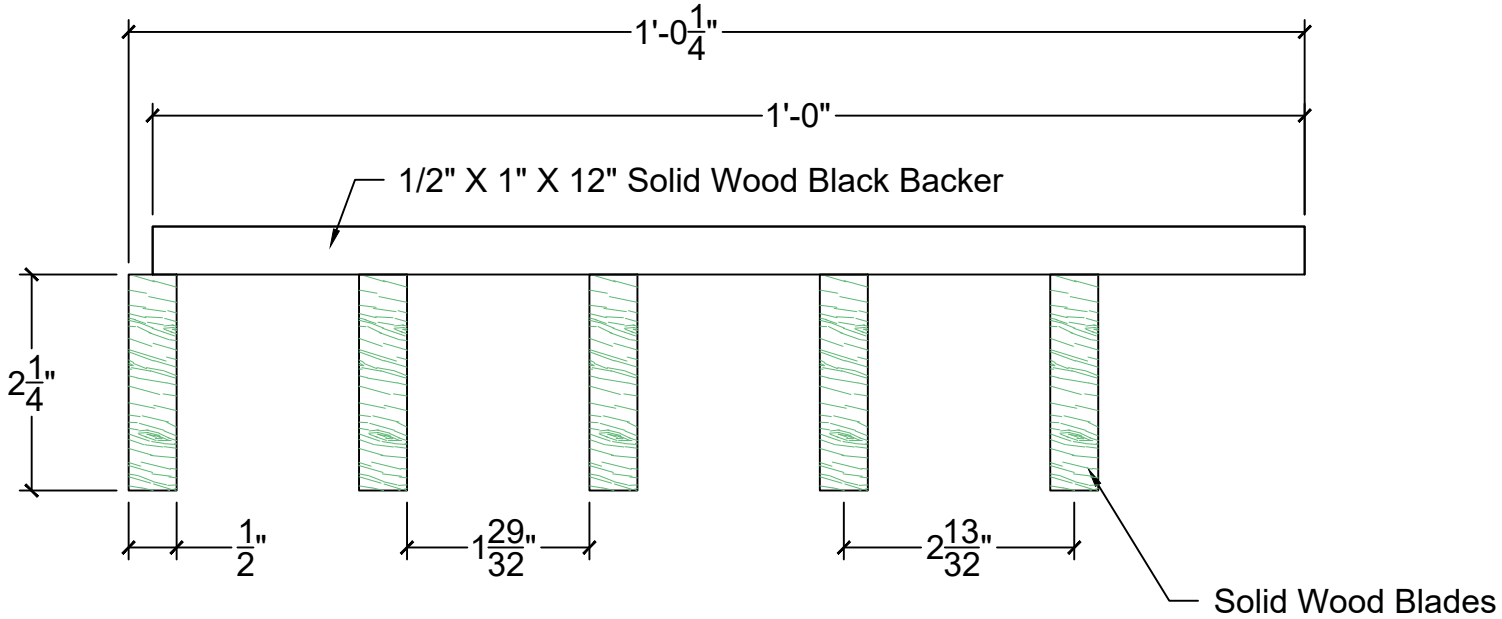

A
P2

Typical Panel Section View

Scale: 6" = 1'

PENNER ARCHITECTURAL MILLWORK LLC

26260 Hwy 32 Lebanon, MO 65536

Office: (417) 718-2400

Website: www.pennerarchitectural.com

PRODUCT DETAILS		
Mach 1-SW-.50 5-2.25		PAGE P2
DATE: 08-10-26	SCALE: AS NOTED	SDR
REV:	DATE:	

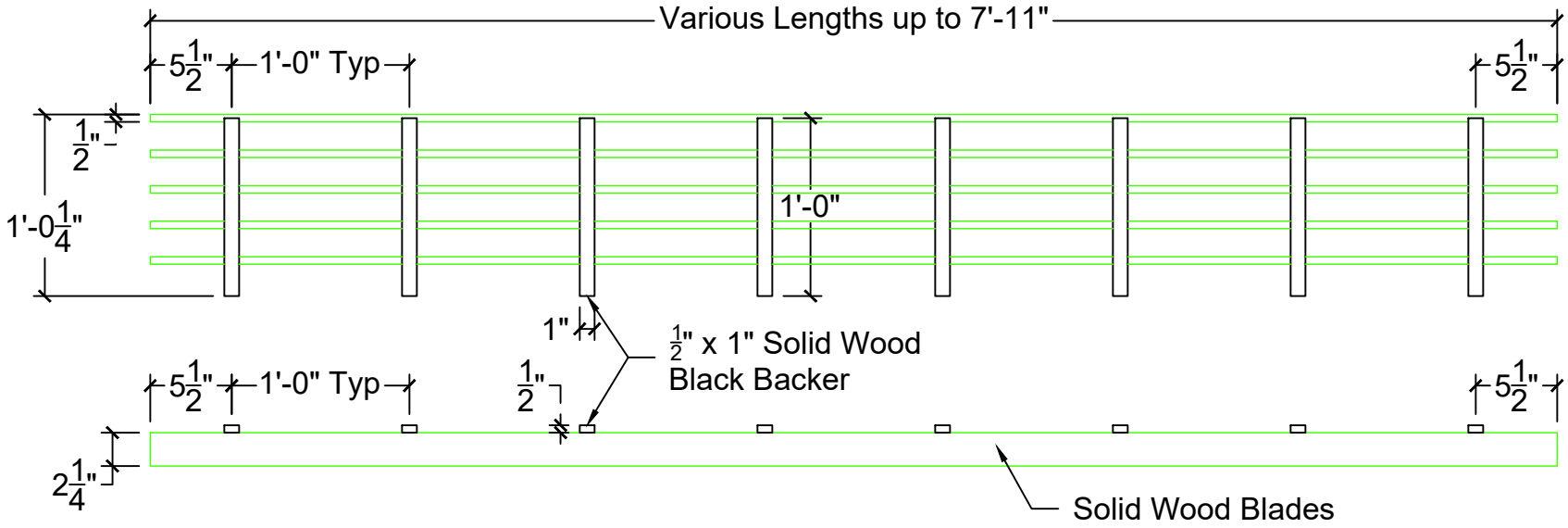

A
P3

Panel Details - Back and Side Views

Scale: 1" = 1'

PENNER ARCHITECTURAL MILLWORK LLC

26260 Hwy 32 Lebanon, MO 65536

Office: (417) 718-2400

Website: www.pennerarchitectural.com

PRODUCT DETAILS		
Mach 1-SW-.50 5-2.25		PAGE P3
DATE: 08-10-26	SCALE: AS NOTED	SDR
REV:	DATE:	

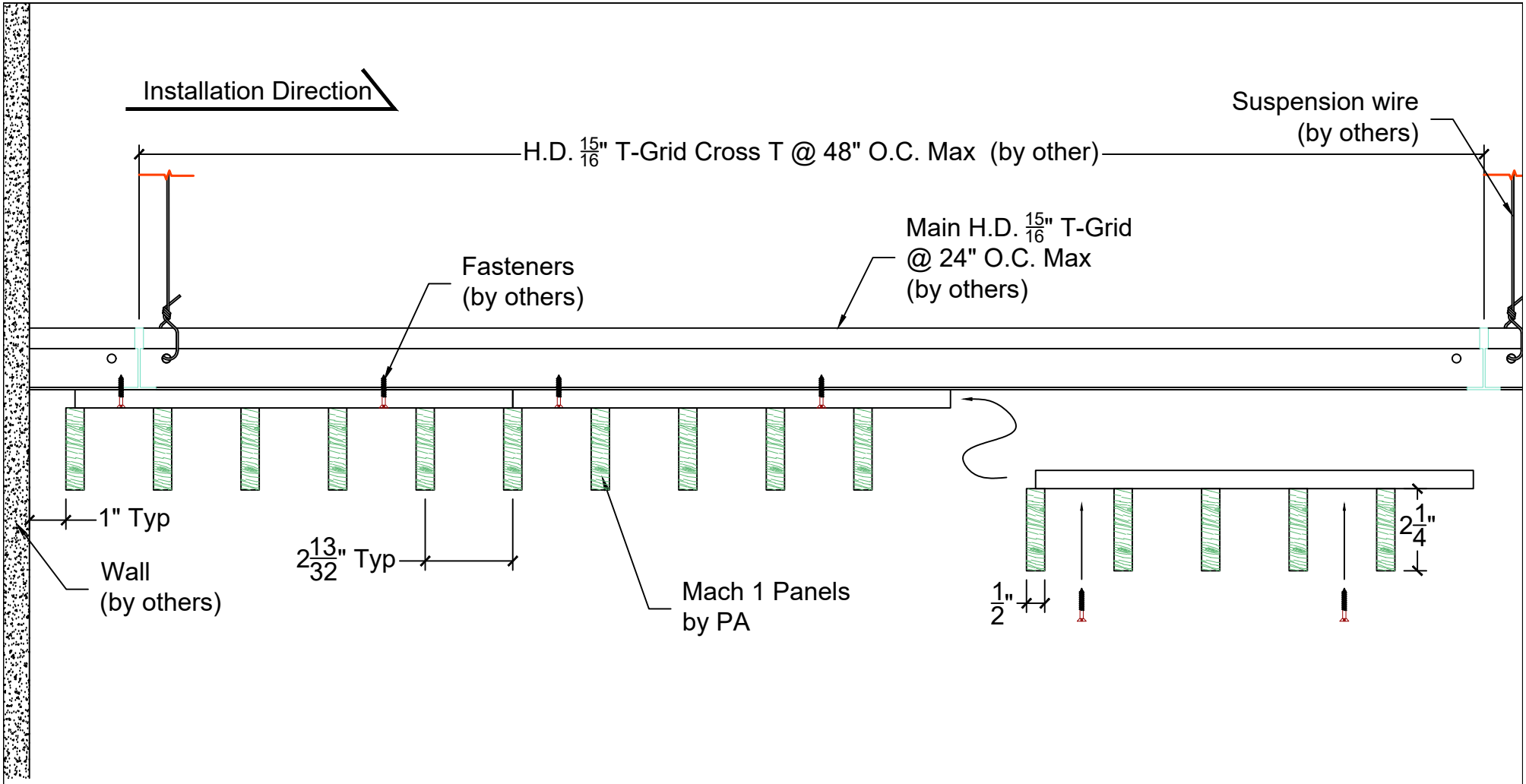

A
P4

Panel Installation - Beginning Ceiling Installation

Scale: 3" = 1'

PENNER ARCHITECTURAL MILLWORK LLC

26260 Hwy 32 Lebanon, MO 65536

Office: (417) 718-2400

Website: www.pennerarchitectural.com

PRODUCT DETAILS		
Mach 1-SW-.50 5-2.25		PAGE P4
DATE: 08-10-26	SCALE: AS NOTED	SDR
REV:	DATE:	

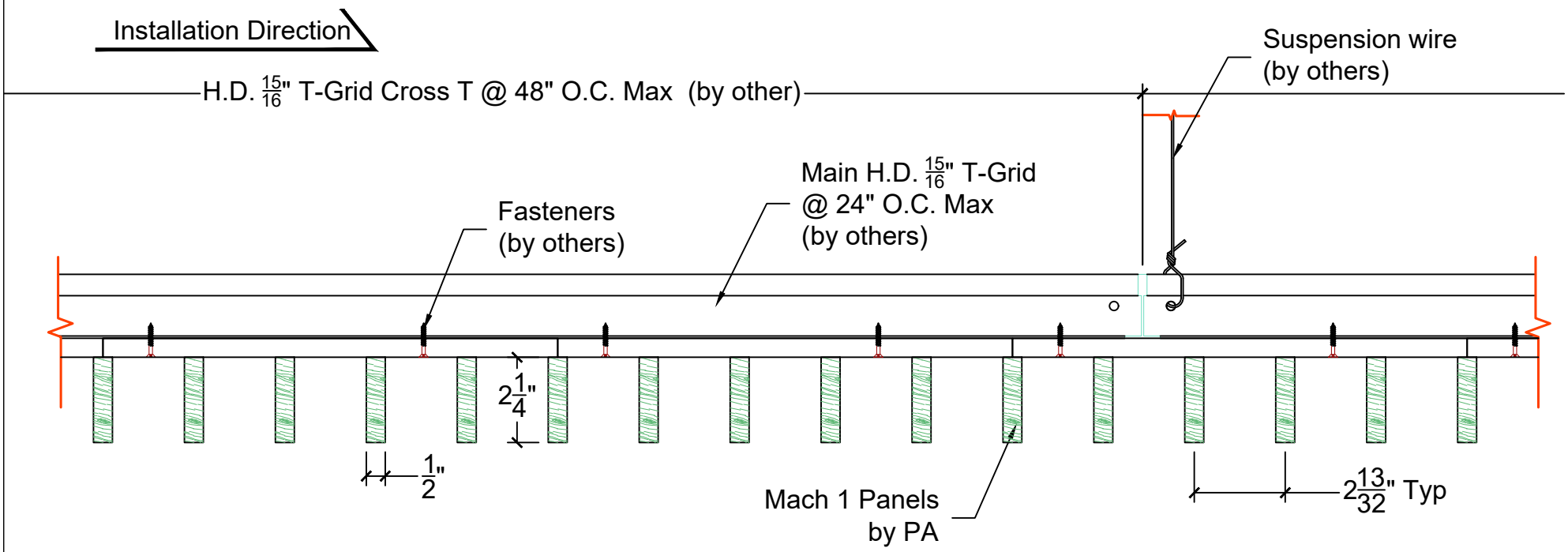

A
P5

Panel Installation Details

Scale: 3" = 1'

PENNER ARCHITECTURAL MILLWORK LLC

26260 Hwy 32 Lebanon, MO 65536

Office: (417) 718-2400

Website: www.pennerarchitectural.com

PRODUCT DETAILS		
Mach 1-SW-.50 5-2.25		PAGE P5
DATE: 08-10-26	SCALE: AS NOTED	SDR
REV:	DATE:	

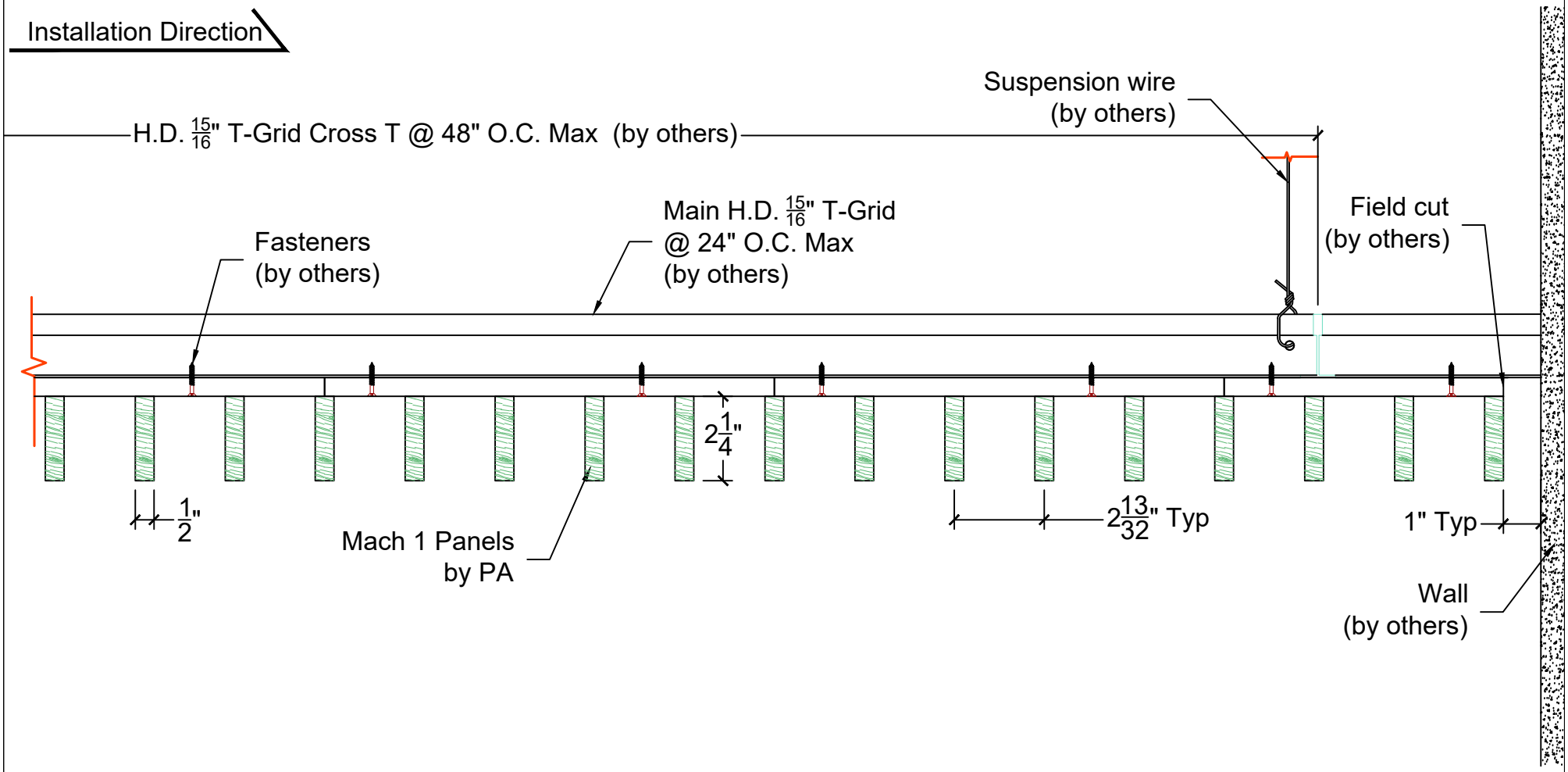

A
P6

Panel Installation - Ending Ceiling Installation

Scale: 3" = 1'

PENNER ARCHITECTURAL MILLWORK LLC

26260 Hwy 32 Lebanon, MO 65536

Office: (417) 718-2400

Website: www.pennerarchitectural.com

PRODUCT DETAILS		
Mach 1-SW-.50 5-2.25		PAGE P6
DATE: 08-10-26	SCALE: AS NOTED	SDR
REV:	DATE:	

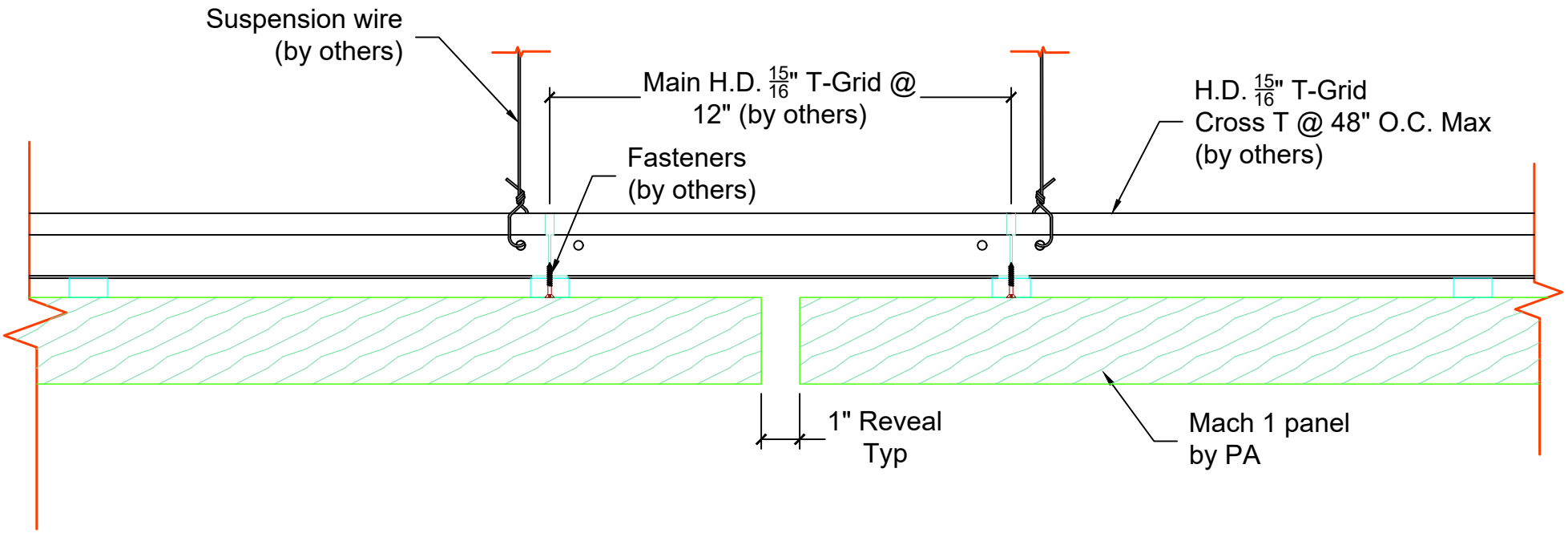

A
P7

Panel Installation @ Reveal Between Panels

Scale: 3" = 1'

PENNER ARCHITECTURAL MILLWORK LLC
26260 Hwy 32 Lebanon, MO 65536
Office: (417) 718-2400
Website: www.pennerarchitectural.com

PRODUCT DETAILS		
Mach 1-SW-.50 5-2.25		PAGE P7
DATE: 08-10-26	SCALE: AS NOTED	SDR
REV:	DATE:	

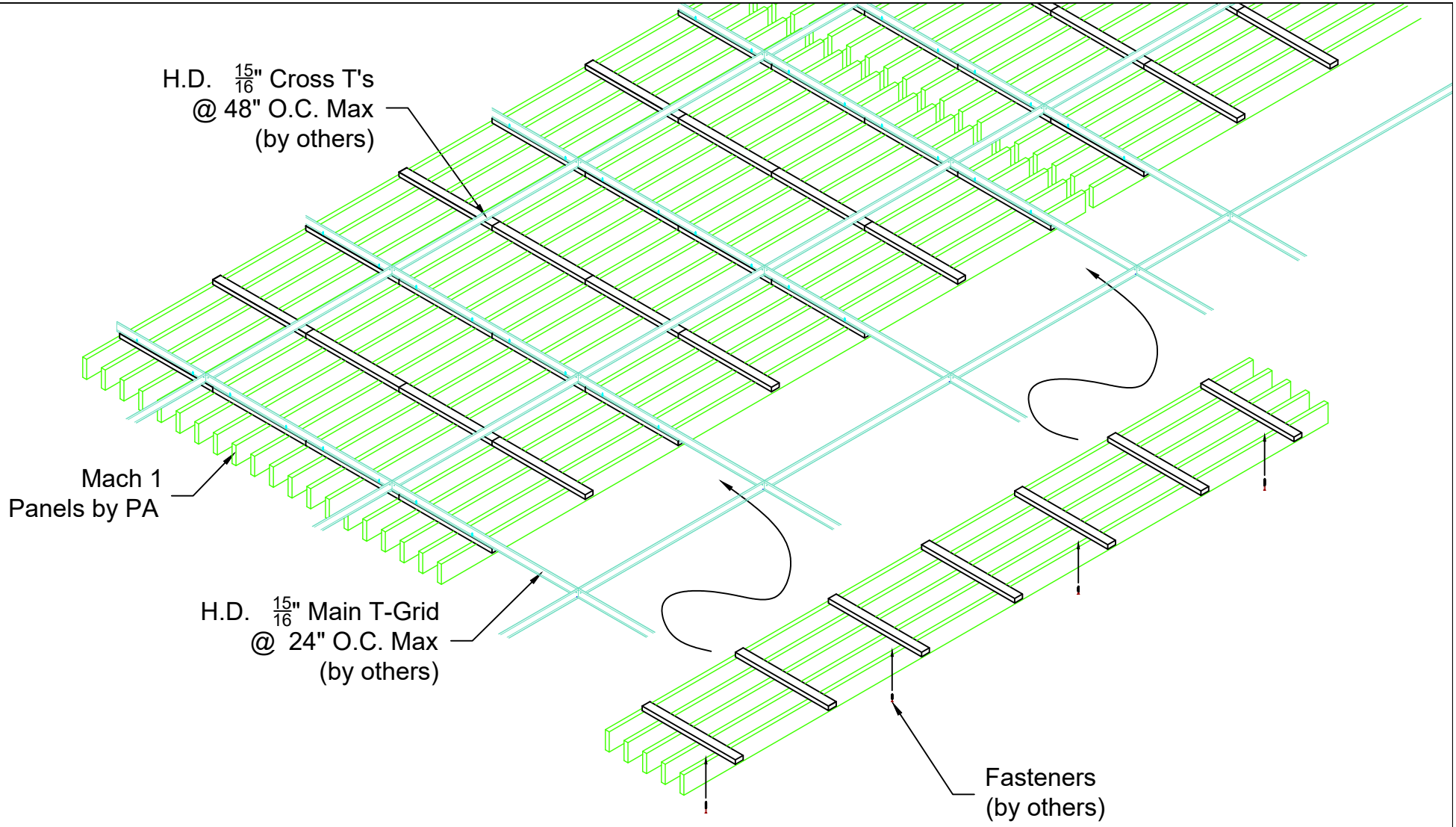

A
P8

Isometric Panel Installation

Scale: 3/4" = 1'

PENNER ARCHITECTURAL MILLWORK LLC
26260 Hwy 32 Lebanon, MO 65536
Office: (417) 718-2400
Website: www.pennerarchitectural.com

PRODUCT DETAILS		
Mach 1-SW-.50 5-2.25		PAGE P8
DATE: 08-10-26	SCALE: AS NOTED	SDR
REV:	DATE:	