Penner Architectural Millwork, LLC

26260 Hwy 32 Lebanon, MO 65536

www.pennerarchitectural.com

Product Details
Drawings Submittals

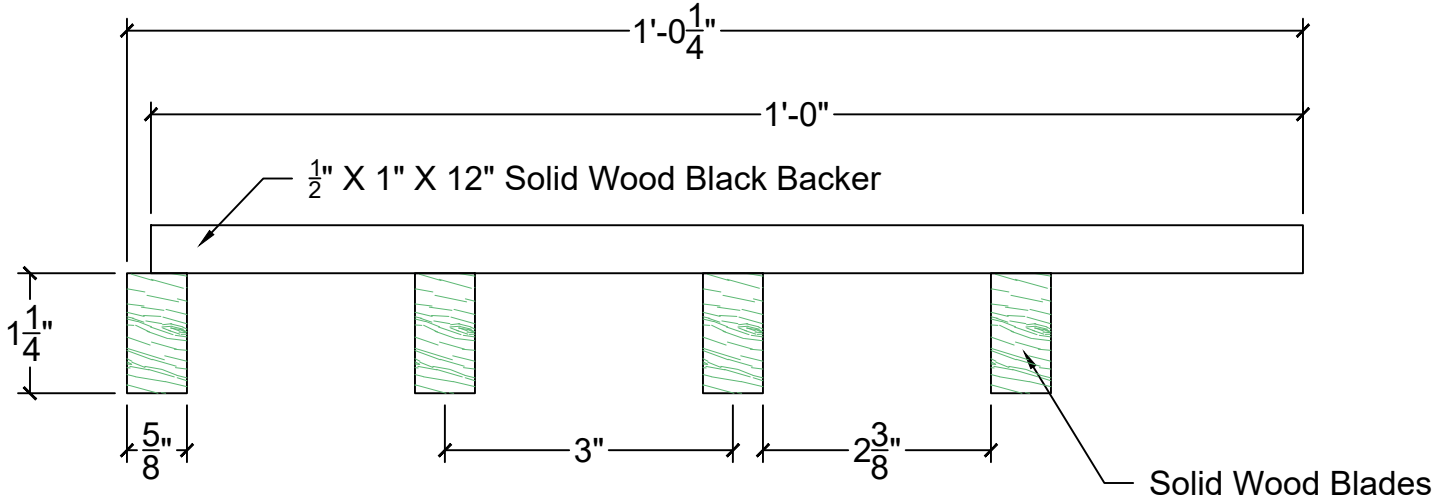

A
P2

Typical Panel Section View

Scale: 6" = 1'

PENNER ARCHITECTURAL MILLWORK LLC

26260 Hwy 32 Lebanon, MO 65536

Office: (417) 718-2400

Website: www.pennerarchitectural.com

PRODUCT DETAILS		
Mach 1-BSW-.625 4-1.25		PAGE P2
DATE: 09-15-26	SCALE: AS NOTED	SDR
REV:	DATE:	

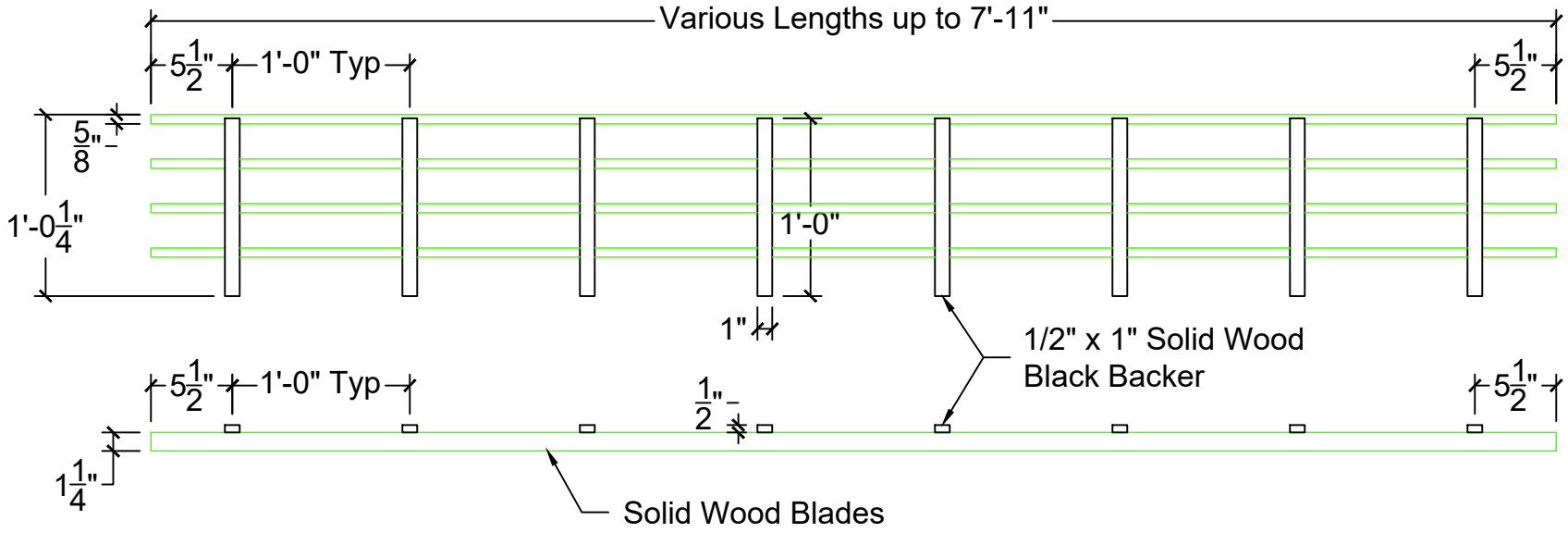

A
P3

Panel Details - Back and Side Views

Scale: 1" = 1'

PENNER ARCHITECTURAL MILLWORK LLC

26260 Hwy 32 Lebanon, MO 65536

Office: (417) 718-2400

Website: www.pennerarchitectural.com

PRODUCT DETAILS		
Mach 1-BSW-.625 4-1.25		PAGE P3
DATE: 09-15-26	SCALE: AS NOTED	SDR
REV:	DATE:	

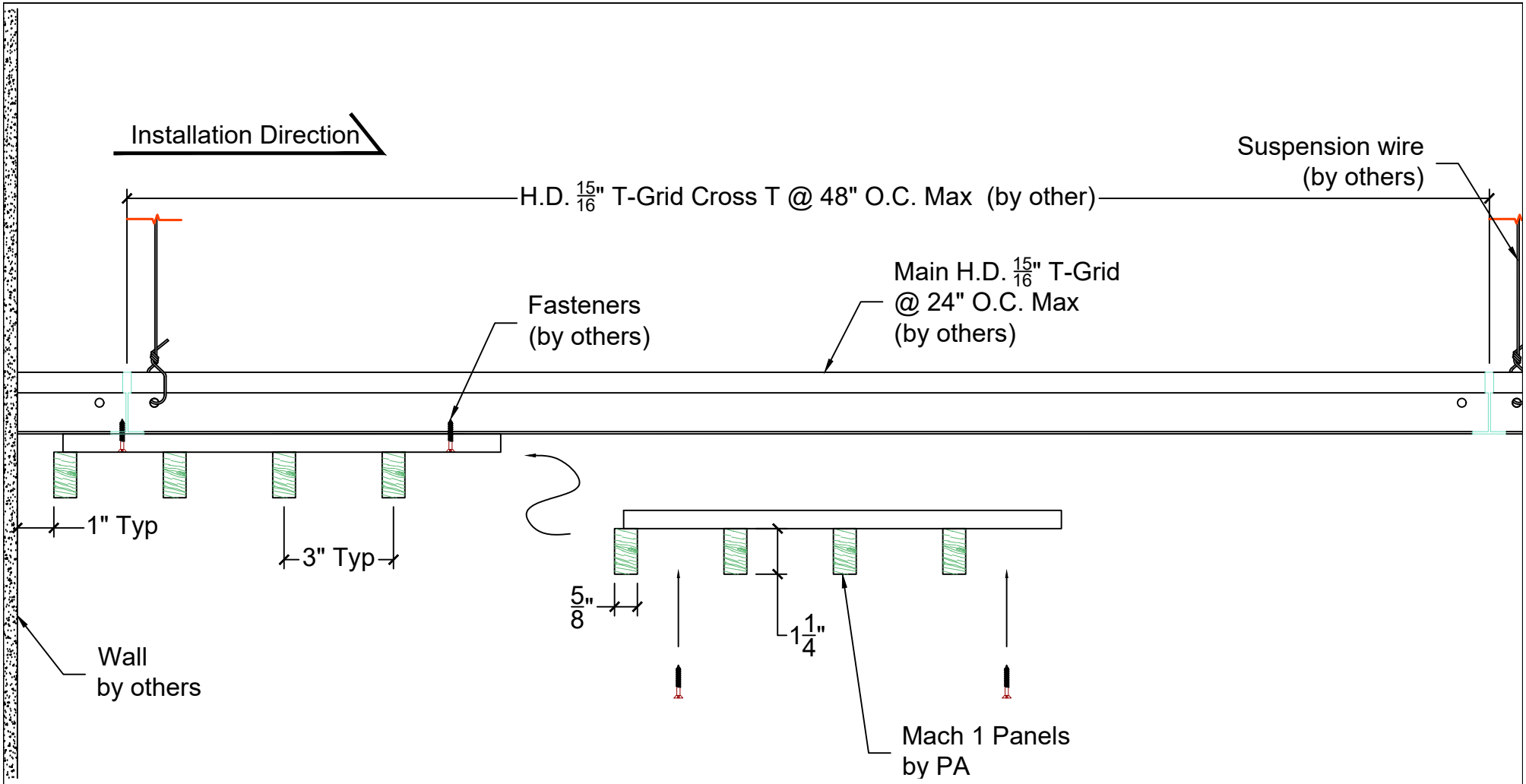

A
P4

Panel Installation - Beginning Ceiling Installation

Scale: 3" = 1'

PENNER ARCHITECTURAL MILLWORK LLC

26260 Hwy 32 Lebanon, MO 65536

Office: (417) 718-2400

Website: www.pennerarchitectural.com

PRODUCT DETAILS		
Mach 1-BSW-.625 4-1.25		PAGE P4
DATE: 09-15-26	SCALE: AS NOTED	SDR
REV:	DATE:	

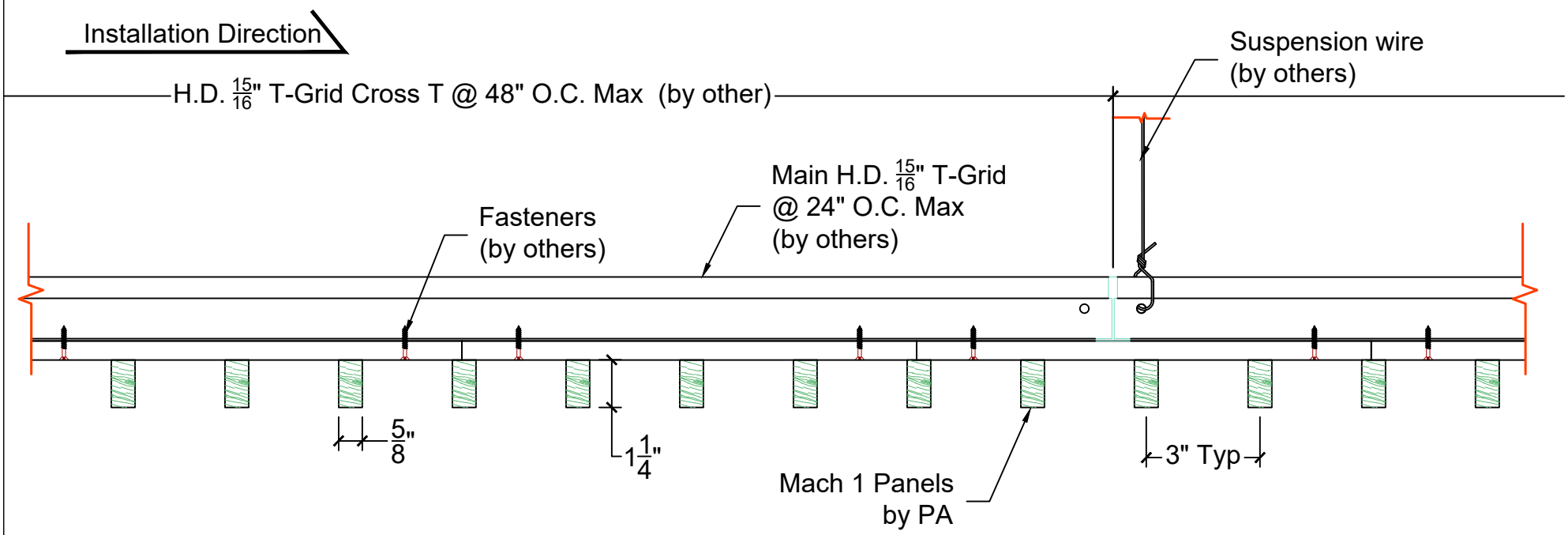

A
P5

Panel Installation Details

Scale: 3" = 1'

PENNER ARCHITECTURAL MILLWORK LLC

26260 Hwy 32 Lebanon, MO 65536

Office: (417) 718-2400

Website: www.pennerarchitectural.com

PRODUCT DETAILS		
Mach 1-BSW-.625 4-1.25		PAGE P5
DATE: 09-15-26	SCALE: AS NOTED	SDR
REV:	DATE:	

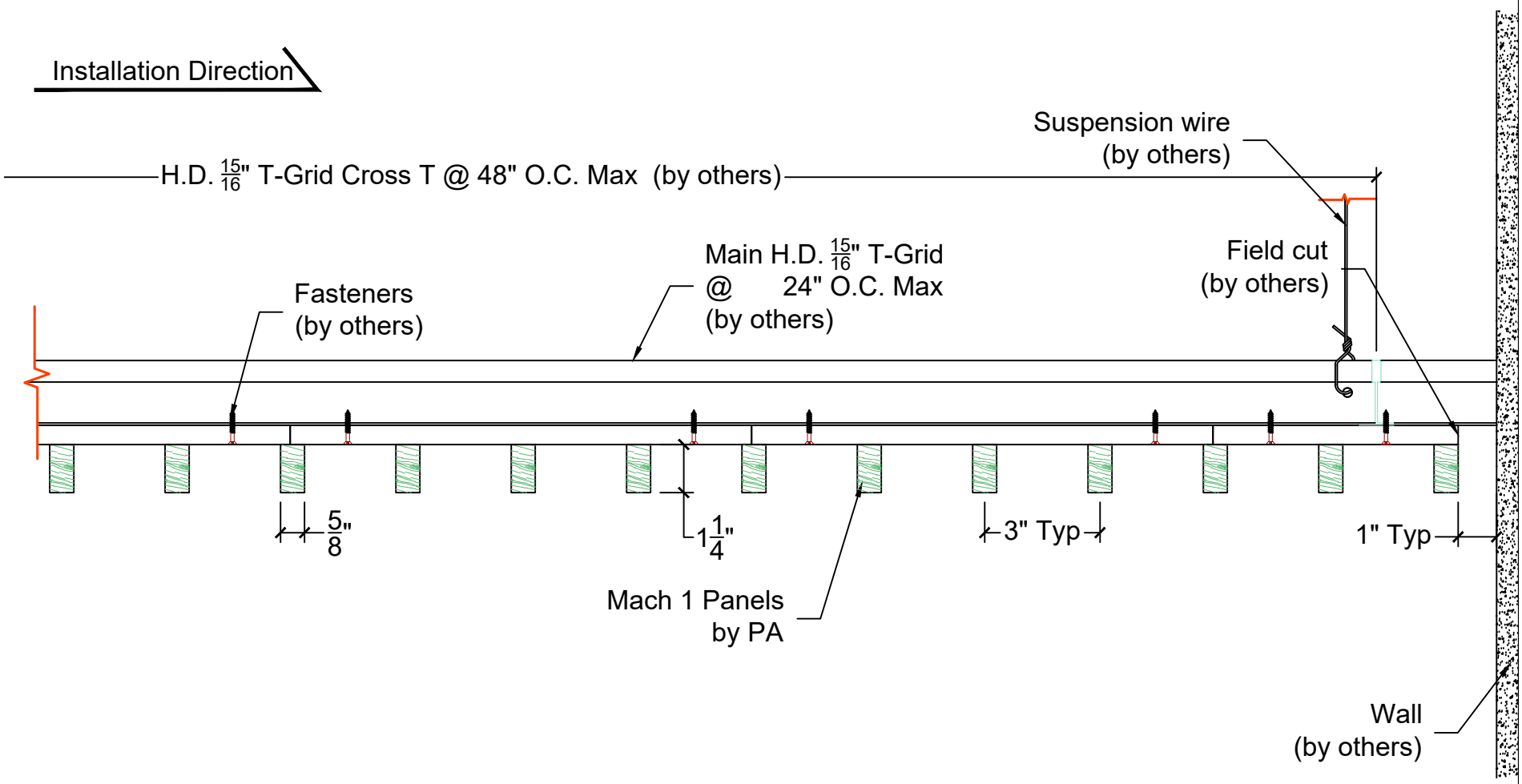

A
P6

Panel Installation - Ending Ceiling Installation

Scale: 3" = 1'

PENNER ARCHITECTURAL MILLWORK LLC

26260 Hwy 32 Lebanon, MO 65536

Office: (417) 718-2400

Website: www.pennerarchitectural.com

PRODUCT DETAILS		
Mach 1-BSW-.625 4-1.25		PAGE P6
DATE: 09-15-26	SCALE: AS NOTED	SDR
REV:	DATE:	

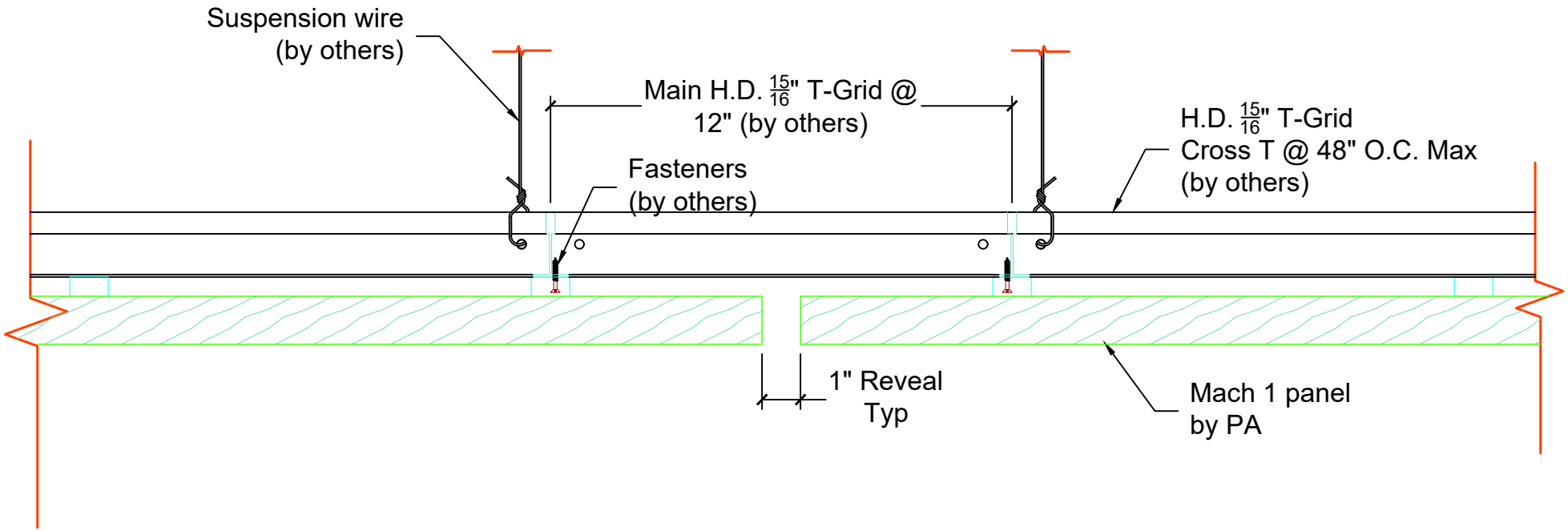

A
P7

Panel Installation @ Reveal Between Panels

Scale: 3" = 1'

PENNER ARCHITECTURAL MILLWORK LLC

26260 Hwy 32 Lebanon, MO 65536

Office: (417) 718-2400

Website: www.pennerarchitectural.com

PRODUCT DETAILS		
Mach 1-BSW-.625 4-1.25		PAGE P7
DATE: 09-15-26	SCALE: AS NOTED	SDR
REV:	DATE:	

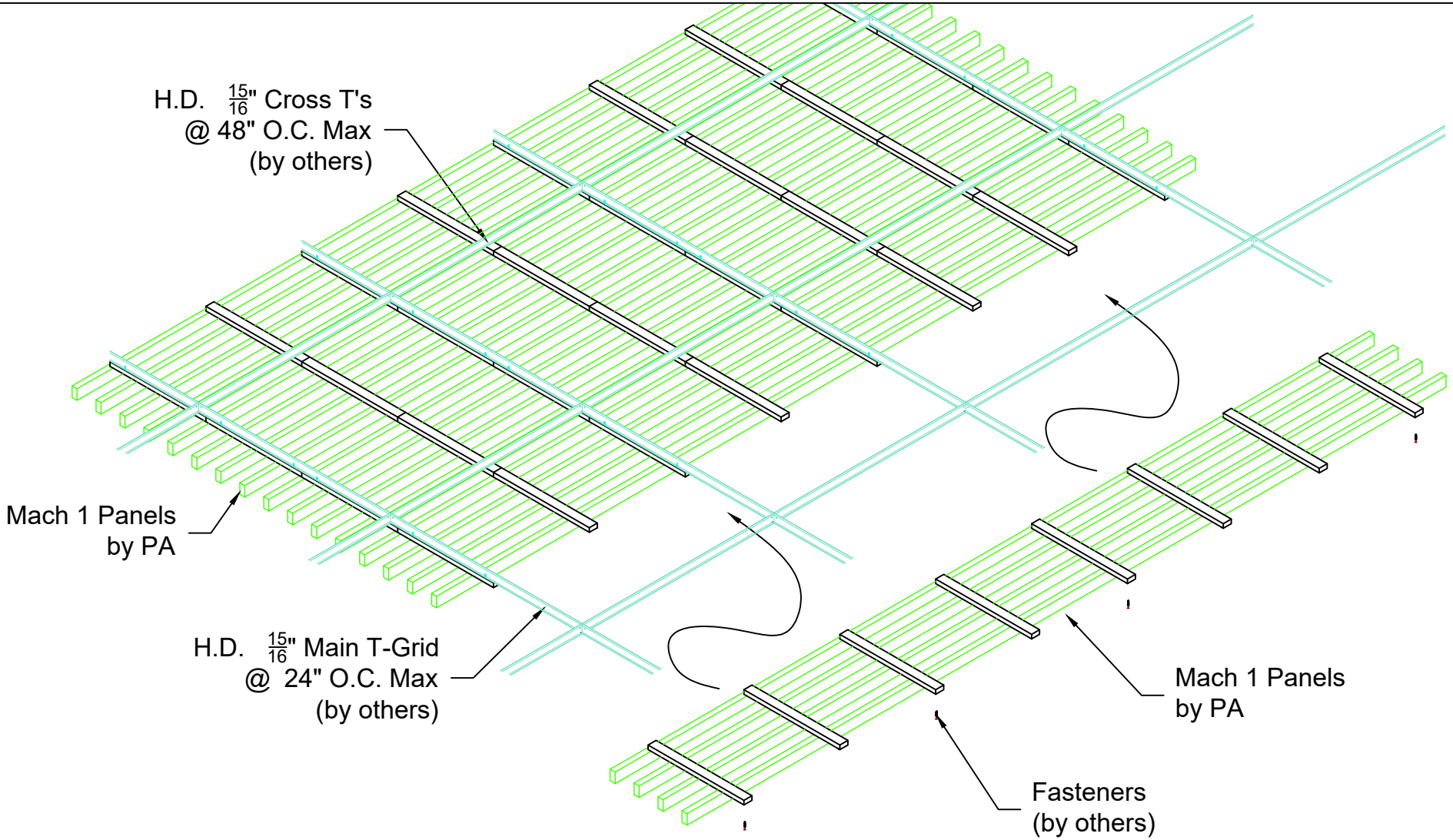

A
P8

Isometric Panel Installation

Scale: 3/4" = 1'

PENNER ARCHITECTURAL MILLWORK LLC
26260 Hwy 32 Lebanon, MO 65536
Office: (417) 718-2400
Website: www.pennerarchitectural.com

PRODUCT DETAILS		
Mach 1-BSW-.625 4-1.25		PAGE P8
DATE: 09-15-26	SCALE: AS NOTED	SDR
REV:	DATE:	