**Penner Architectural Millwork, LLC**

**26260 Hwy 32 Lebanon, MO 65536**

**www.pennerarchitectural.com**

# Product Details
# Drawings Submittals

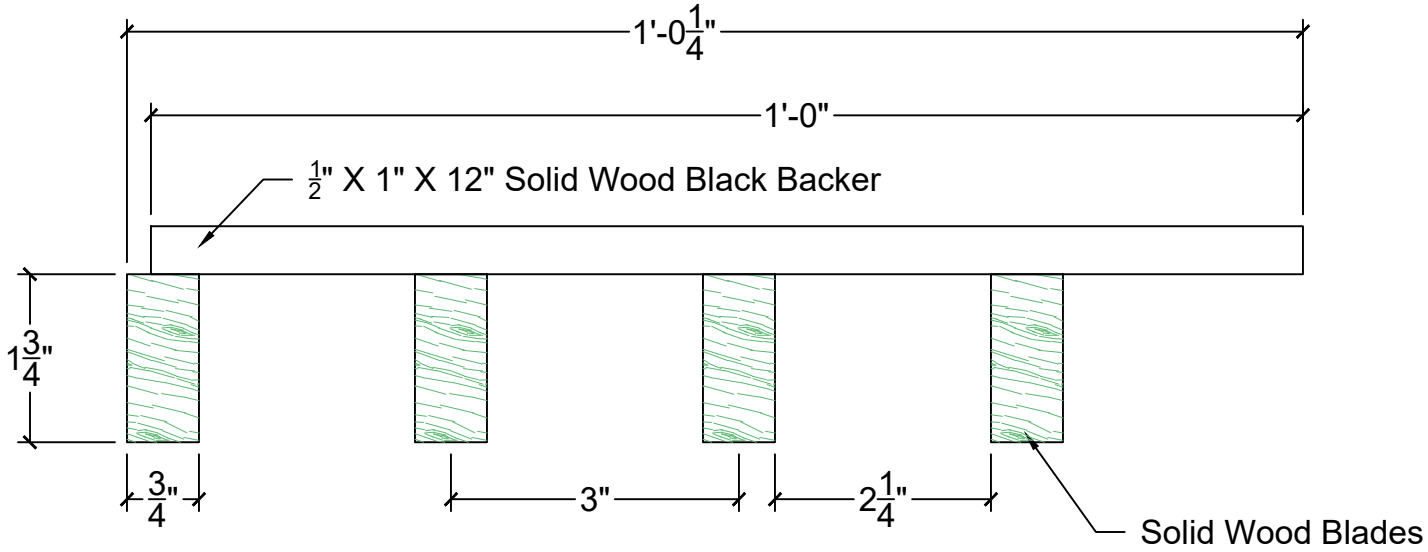


A
P2

Typical Panel Section View

Scale: 6" = 1'

PENNER ARCHITECTURAL MILLWORK LLC

26260 Hwy 32 Lebanon, MO 65536

Office: (417) 718-2400

Website: www.pennerarchitectural.com

| PRODUCT DETAILS | | |
|---|---|---|
| Mach 1-BSW-.75 4-1.75 | | PAGE P2 |
| DATE: 09-15-26 | SCALE: AS NOTED | SDR |
| REV: | DATE: | |

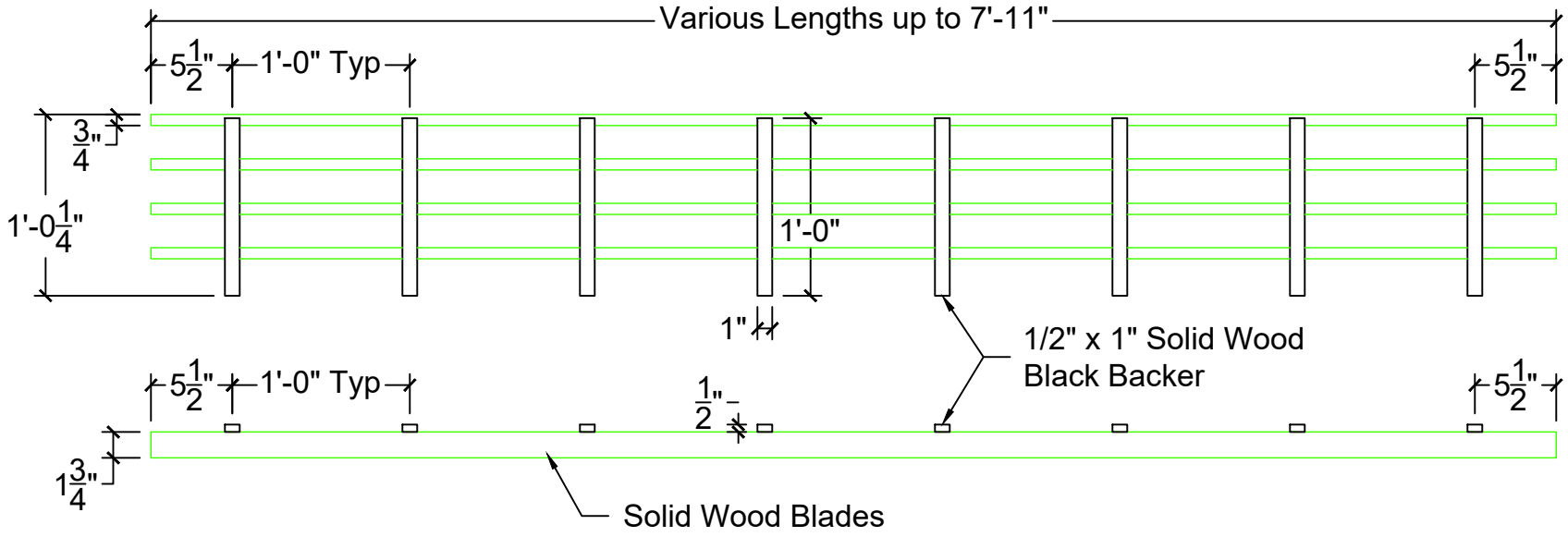


A
P3

## Panel Details - Back and Side Views

Scale: 1" = 1'

PENNER ARCHITECTURAL MILLWORK LLC
26260 Hwy 32 Lebanon, MO 65536
Office: (417) 718-2400
Website: www.pennerarchitectural.com

| PRODUCT DETAILS | | |
|---|---|---|
| Mach 1-BSW-.75 4-1.75 | | PAGE P3 |
| DATE: 09-15-26 | SCALE: AS NOTED | SDR |
| REV: | DATE: | |

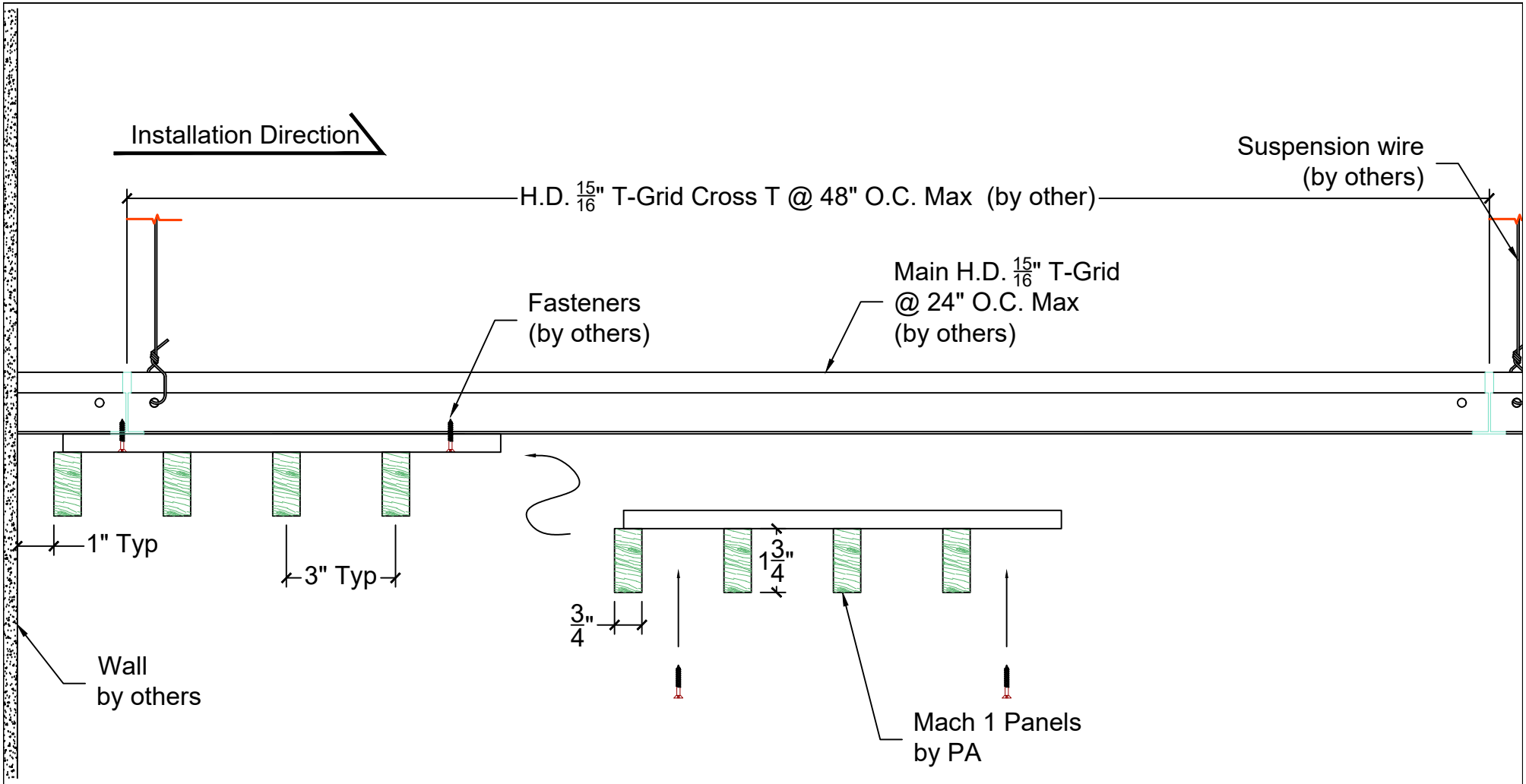


A
P4

## Panel Installation - Beginning Ceiling Installation

Scale: 3" = 1'


PENNER ARCHITECTURAL MILLWORK LLC

26260 Hwy 32 Lebanon, MO 65536

Office: (417) 718-2400

Website: www.pennerarchitectural.com


| PRODUCT DETAILS | | |
|---|---|---|
| Mach 1-BSW-.75 4-1.75 | | PAGE P4 |
| DATE: 09-15-26 | SCALE: AS NOTED | SDR |
| REV: | DATE: | |

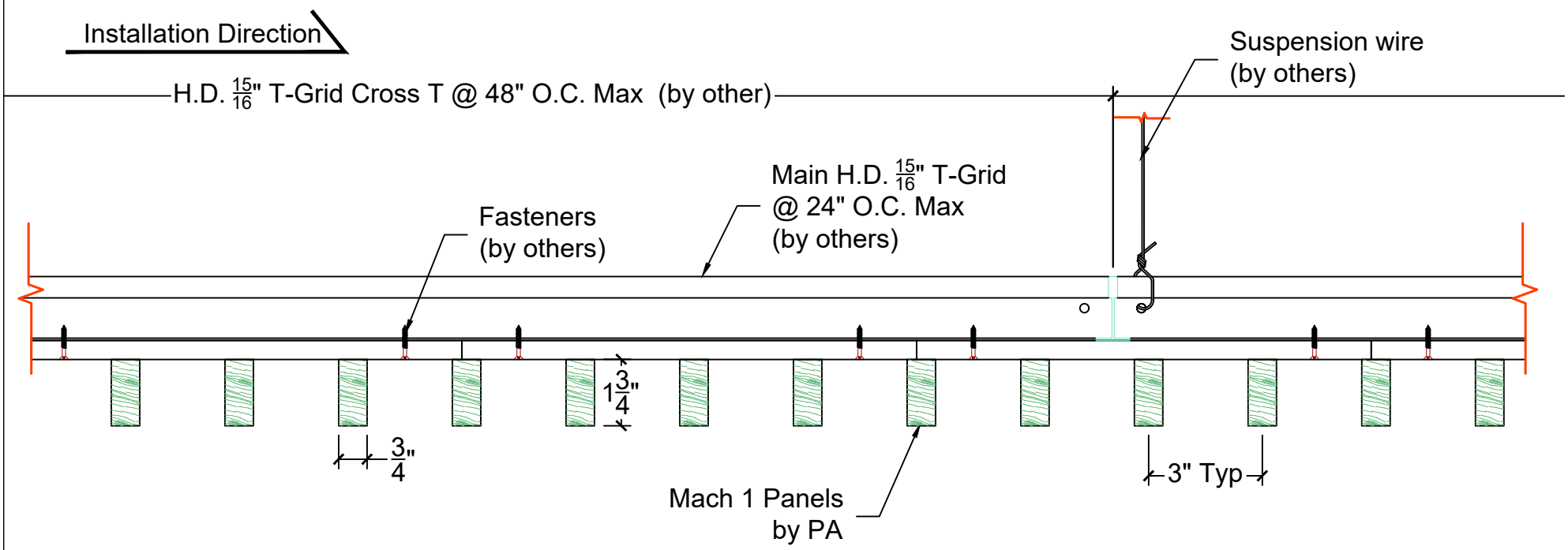


A
P5

## Panel Installation Details

Scale: 3" = 1'


PENNER ARCHITECTURAL MILLWORK LLC

26260 Hwy 32 Lebanon, MO 65536

Office: (417) 718-2400

Website: www.pennerarchitectural.com


| PRODUCT DETAILS | | |
|---|---|---|
| Mach 1-BSW-.75 4-1.75 | | PAGE P5 |
| DATE: 09-15-26 | SCALE: AS NOTED | SDR |
| REV: | DATE: | |

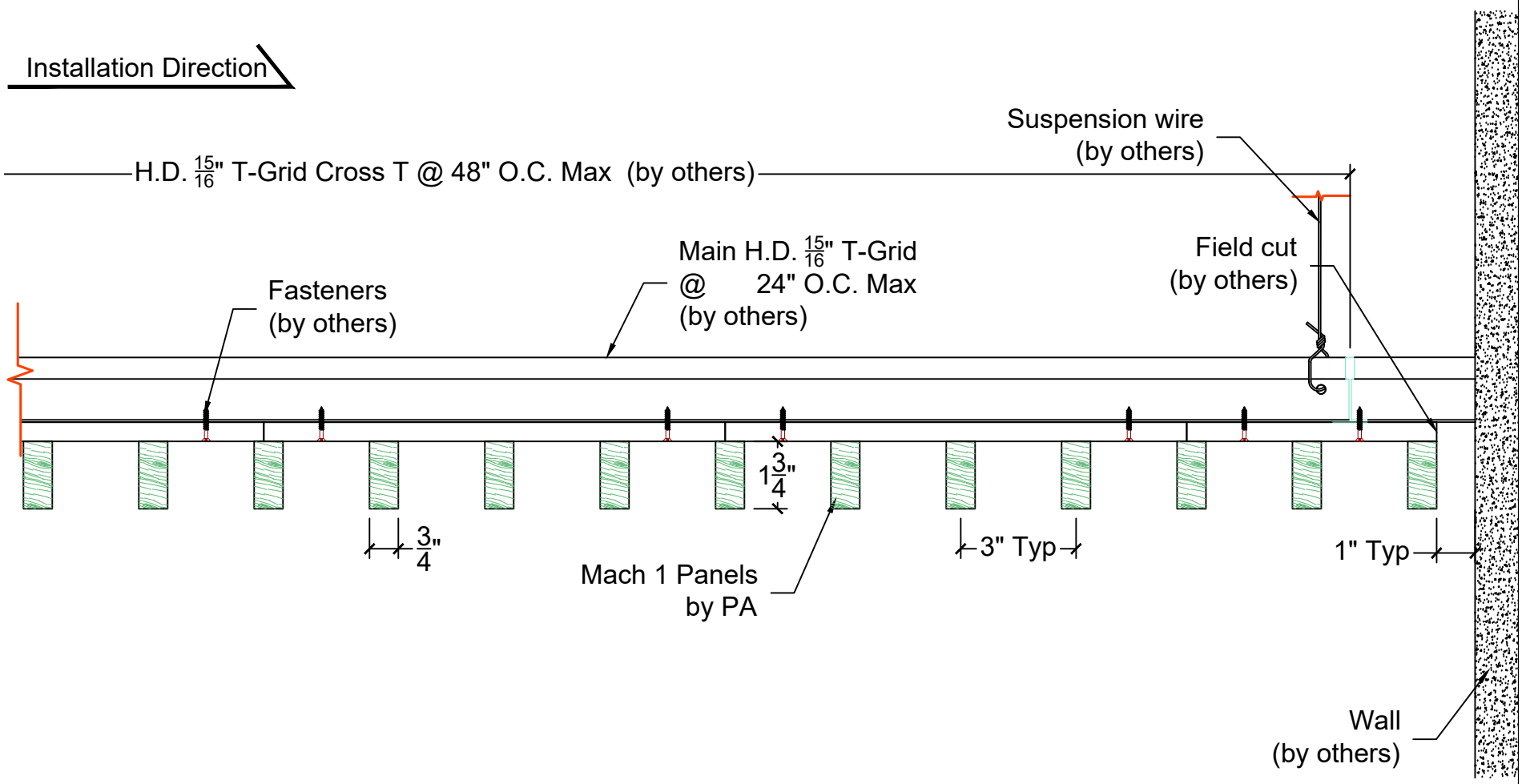


A
P6

Panel Installation - Ending Ceiling Installation

Scale: 3" = 1'

PENNER ARCHITECTURAL MILLWORK LLC

26260 Hwy 32 Lebanon, MO 65536

Office: (417) 718-2400

Website: www.pennerarchitectural.com

| PRODUCT DETAILS | | |
|---|---|---|
| Mach 1-BSW-.75 4-1.75 | | PAGE P6 |
| DATE: 09-15-26 | SCALE: AS NOTED | SDR |
| REV: | DATE: | |

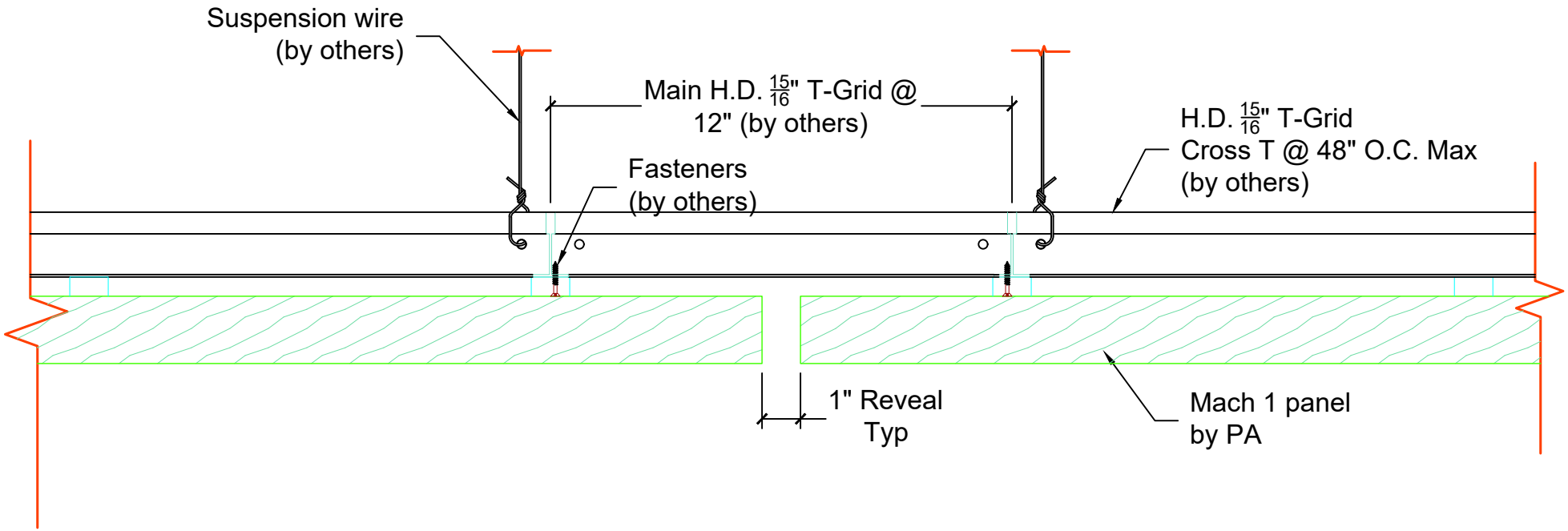


A
P7

## Panel Installation @ Reveal Between Panels

Scale: 3" = 1'

PENNER ARCHITECTURAL MILLWORK LLC

26260 Hwy 32 Lebanon, MO 65536

Office: (417) 718-2400

Website: www.pennerarchitectural.com

| PRODUCT DETAILS | | |
|---|---|---|
| Mach 1-BSW-.75 4-1.75 | | PAGE P7 |
| DATE: 09-15-26 | SCALE: AS NOTED | SDR |
| REV: | DATE: | |

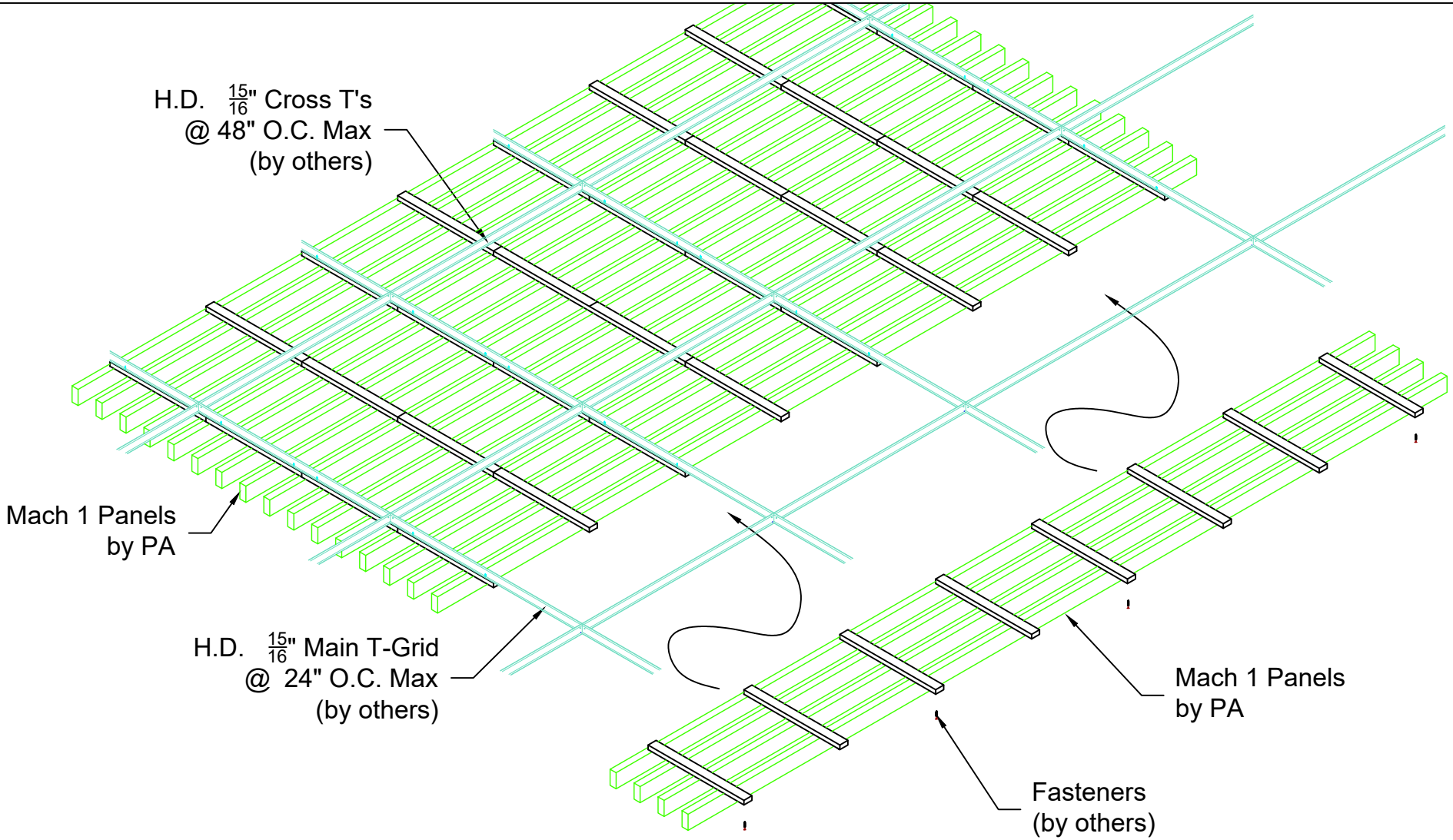


A
P8

## Isometric Panel Installation

Scale: 3/4" = 1'

PENNER ARCHITECTURAL MILLWORK LLC
26260 Hwy 32 Lebanon, MO 65536
Office: (417) 718-2400
Website: www.pennerarchitectural.com

| PRODUCT DETAILS | | |
|---|---|---|
| Mach 1-BSW-.75 4-1.75 | | PAGE P8 |
| DATE: 09-15-26 | SCALE: AS NOTED | SDR |
| REV: | DATE: | |