Penner Architectural Millwork, LLC

26260 Hwy 32 Lebanon, MO 65536

www.pennerarchitectural.com

Product Details
Drawings Submittals

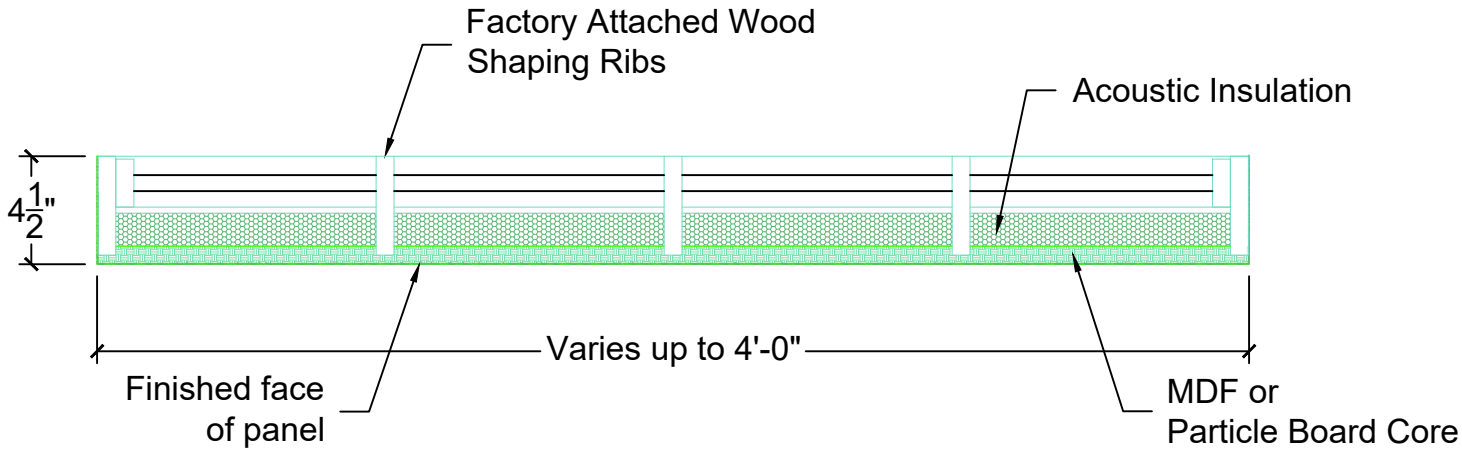

A
P2

Panel Section Views

Scale: 1" = 1'

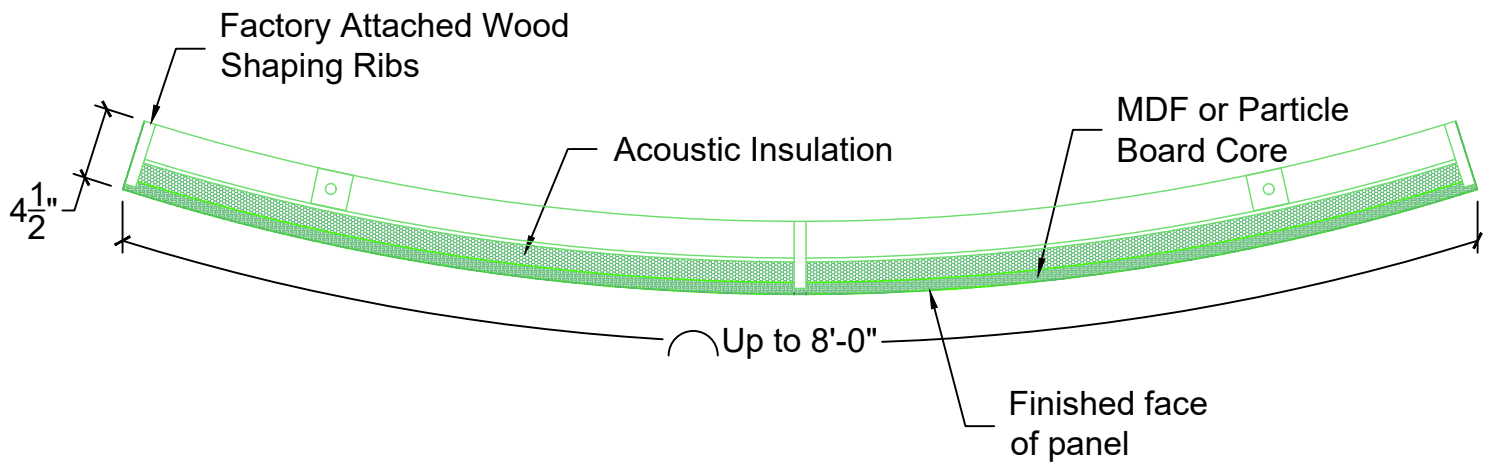

B
P2

Panel Section Views

Scale: 1" = 1'

PENNER ARCHITECTURAL MILLWORK LLC
26260 Hwy 32 Lebanon, MO 65536
Office: (417) 718-2400
Website: www.pennerarchitectural.com

PRODUCT DETAILS		
Camby-S3-4896		PAGE P2
DATE: 09-11-26	SCALE: AS NOTED	SDR
REV:	DATE:	

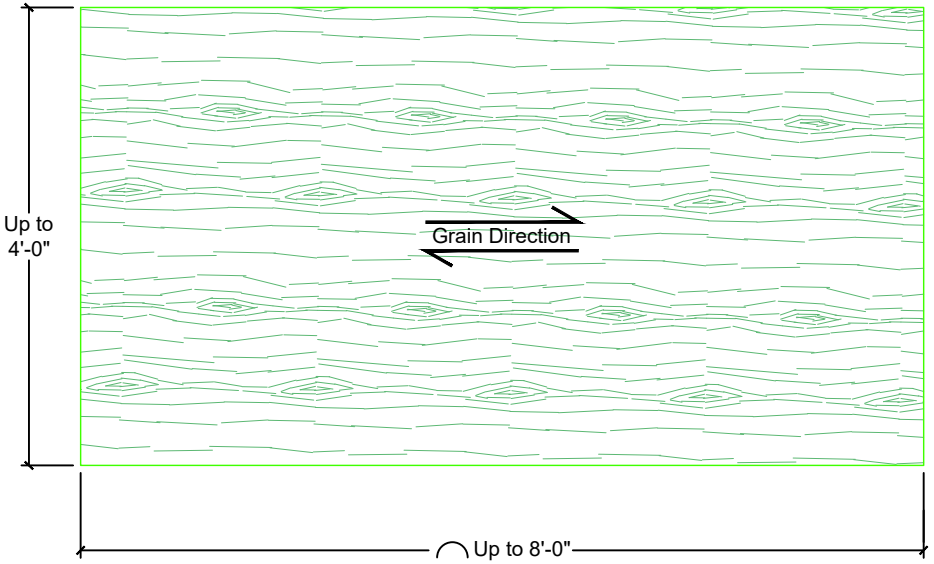

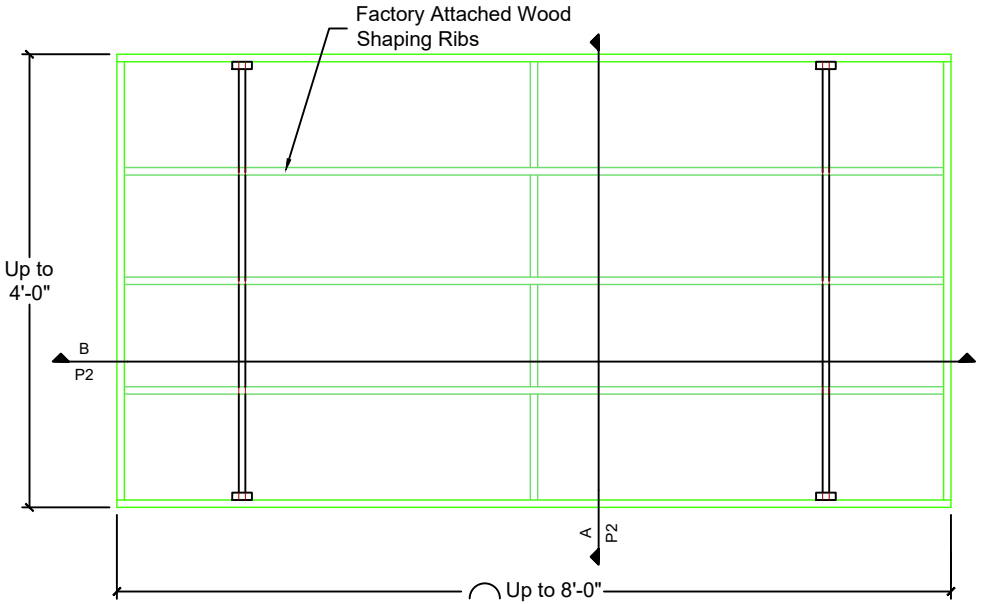

A
P3

Typical Panel Face and Back Views

Scale: 1" = 1'

PENNER ARCHITECTURAL MILLWORK LLC

26260 Hwy 32 Lebanon, MO 65536

Office: (417) 718-2400

Website: www.pennerarchitectural.com

PRODUCT DETAILS		
Camby-S3-4896		PAGE P3
DATE: 09-11-26	SCALE: AS NOTED	SDR
REV:	DATE:	

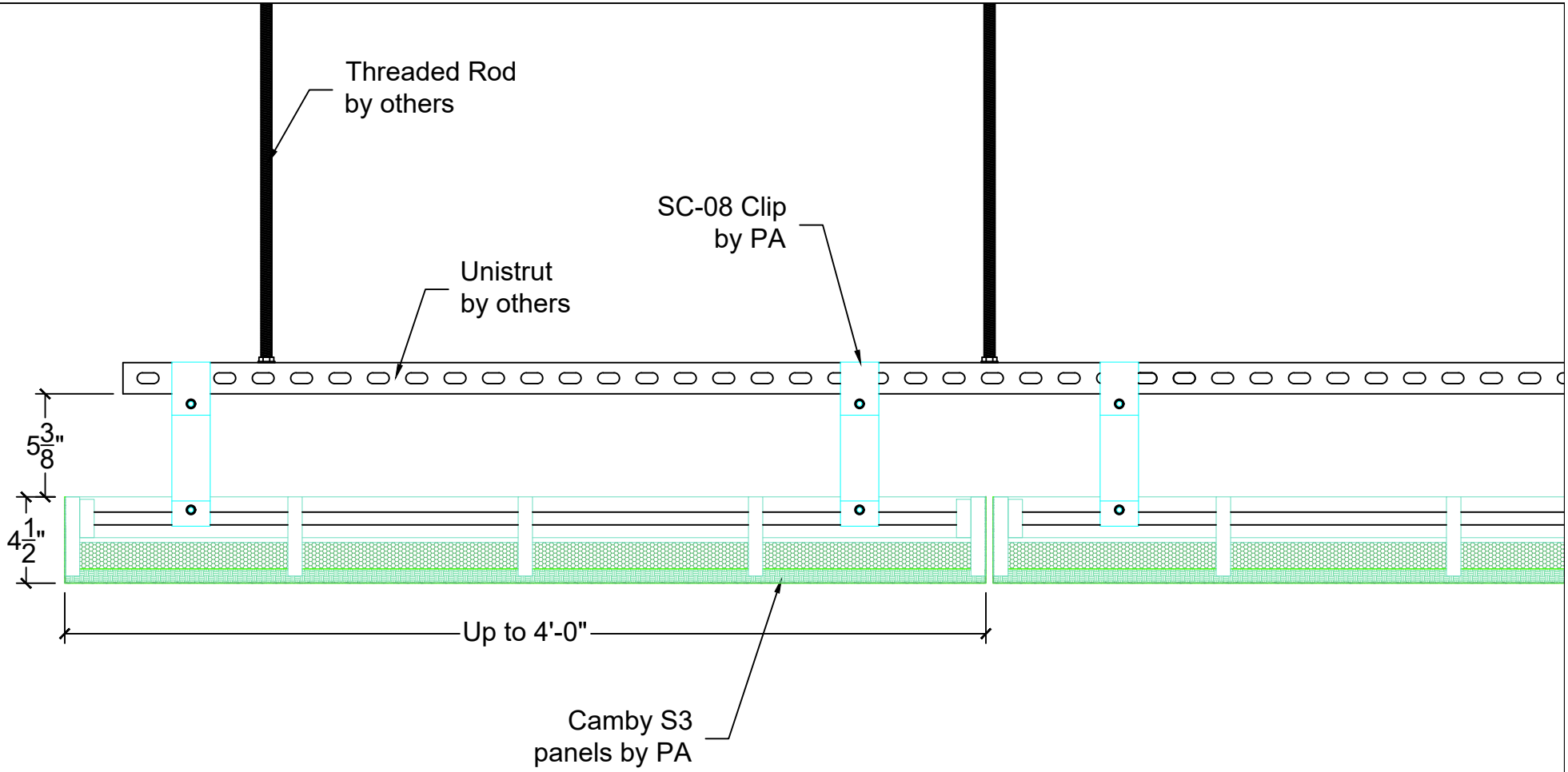

A
P4

Panel Installation Details

Scale: 1-1/2" = 1'

PENNER ARCHITECTURAL MILLWORK LLC
26260 Hwy 32 Lebanon, MO 65536
Office: (417) 718-2400
Website: www.pennerarchitectural.com

PRODUCT DETAILS		
Camby-S3-4896		PAGE P4
DATE: 09-11-26	SCALE: AS NOTED	SDR
REV:	DATE:	

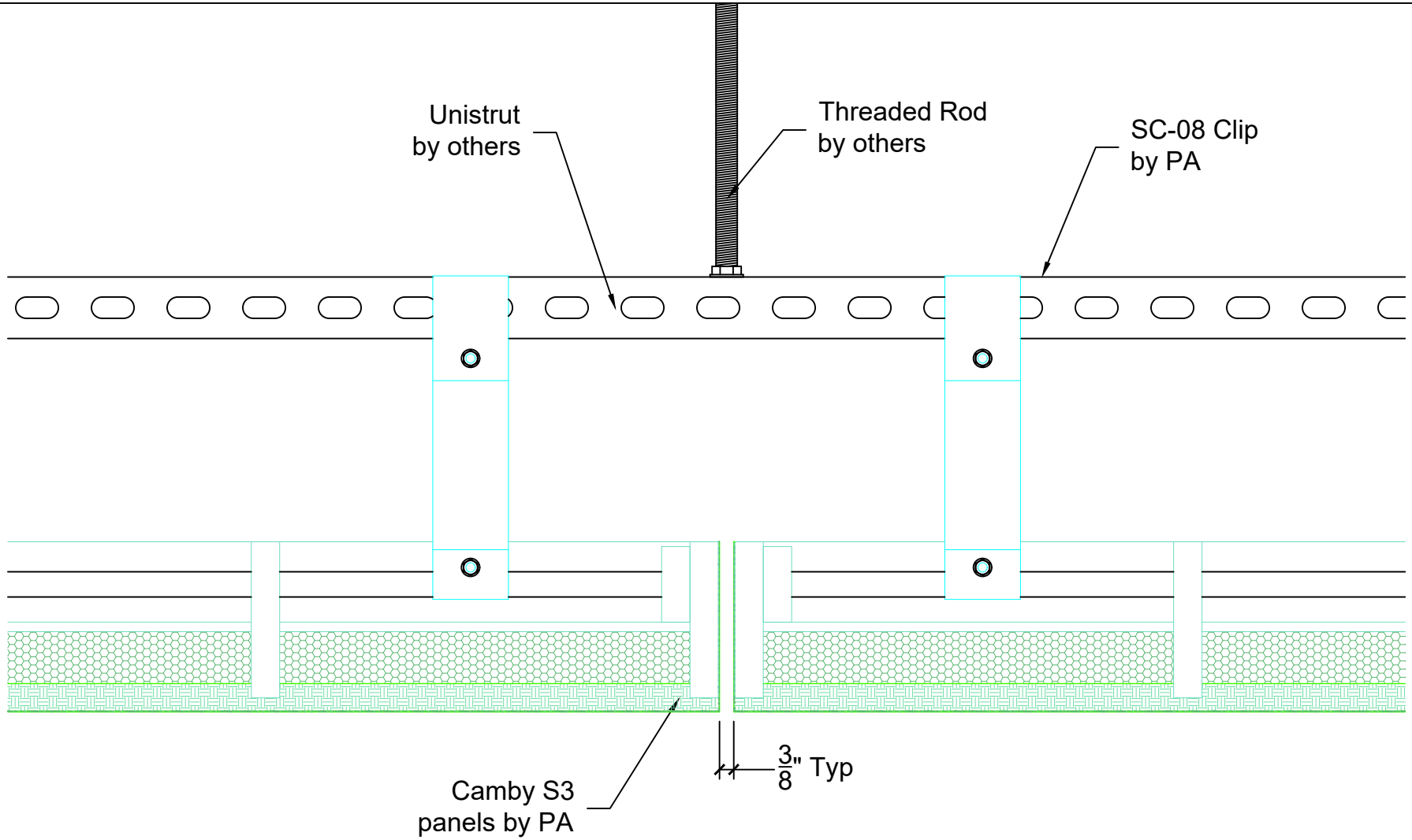

A
P5

Panel Installation @ Reveal between Panels

Scale: 3" = 1'

PENNER ARCHITECTURAL MILLWORK LLC
26260 Hwy 32 Lebanon, MO 65536
Office: (417) 718-2400
Website: www.pennerarchitectural.com

PRODUCT DETAILS		
Camby-S3-4896		PAGE P5
DATE: 09-11-26	SCALE: AS NOTED	SDR
REV:	DATE:	

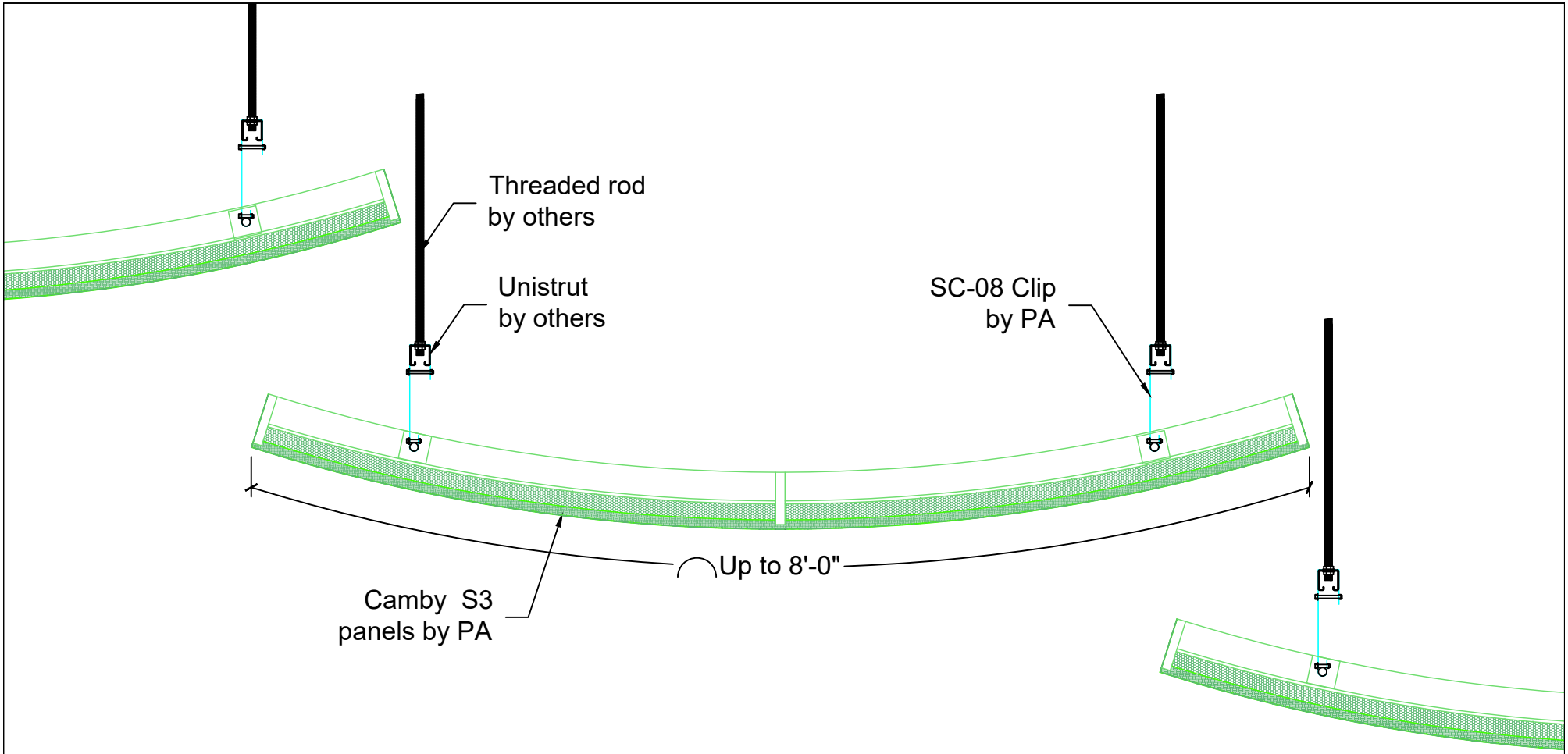

A
P6

Panel Installation Details

Scale: 1" = 1'

PENNER ARCHITECTURAL MILLWORK LLC
26260 Hwy 32 Lebanon, MO 65536
Office: (417) 718-2400
Website: www.pennerarchitectural.com

PRODUCT DETAILS		
Camby-S3-4896		PAGE P6
DATE: 09-11-26	SCALE: AS NOTED	SDR
REV:	DATE:	

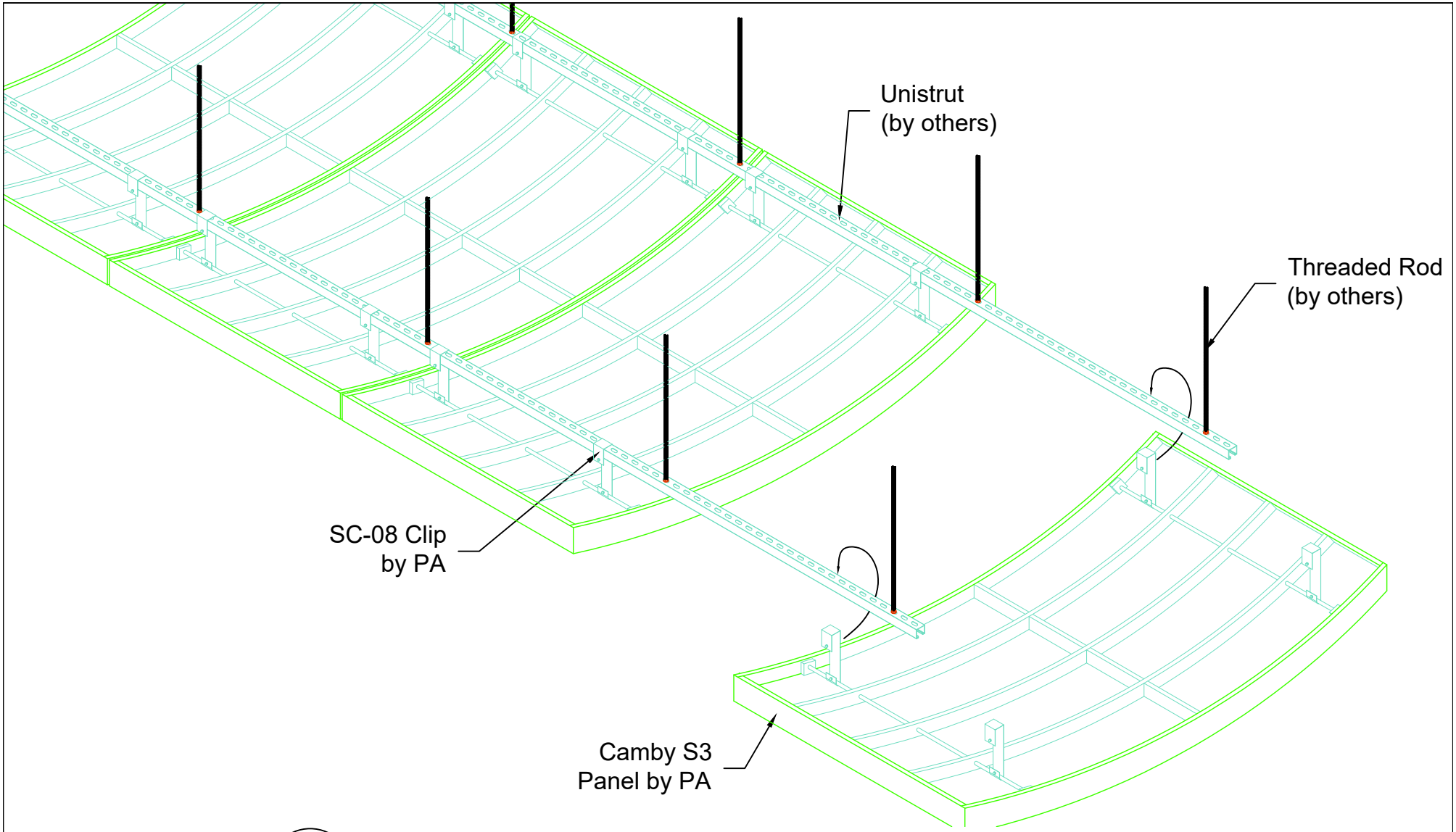

A
P7

Isometric Panel Installation

Scale: 1/2" = 1'

PENNER ARCHITECTURAL MILLWORK LLC
26260 Hwy 32 Lebanon, MO 65536
Office: (417) 718-2400
Website: www.pennerarchitectural.com

PRODUCT DETAILS		
Camby-S3-4896		PAGE P7
DATE: 09-11-26	SCALE: AS NOTED	SDR
REV:	DATE:	